DEPARTMENT OF THE NAVY
JOINT BASE PEARL HARBOR-HICKAM
850 TICONDEROGA ST STE 100
PEARL HARBOR HI 96860-5102

JBPHHINST 2790.1
CF4
19 Jul 12

JOINT BASE PEARL HARBOR-HICKAM INSTRUCTION 2790.1

From: Commander, Joint Base Pearl Harbor-Hickam

Subj: INFORMATION TECHNOLOGY SERVICES MANAGEMENT (ITSM) FIXED VOICE, SPECIAL CIRCUITS AND INFRASTRUCTURE SUPPORT

Encl: (1) ITSM Process Flow Charts
(2) Breakdown of Responsibilities
(3) Glossary

Ref: (a) Joint Basing Implementation Guidance, Attachment D, Installation Support Function Definitions, OSD/ATL, 22 Jan 08
(b) ITSM Supplemental Guidance for Implementing and Operating a Joint Base, DoD/CIO, 21 Apr 08
(c) JBPHH Memorandum of Agreement, VCSAF with VCNO, 17 Aug 09
(d) NAVCOMTEL COMINST 2066.1B, Navy Base Communications Manual, Nov 98

1. Purpose. This Instruction supplements references (a) through (c). It provides Joint Base Pearl Harbor-Hickam (JBPHH)-specific guidance on the procedures and responsibilities for Information Technology Service Management (ITSM) sub-functions (1) Fixed Voice, with Special Circuits, and (4) Infrastructure Support.

2. Background. Joint Basing entered Full Operational Capability at Joint Base Pearl Harbor-Hickam effective 1 October 2010. Among the many responsibilities that officially transitioned at that time from Air Force to Navy were ITSM sub-function (1) Fixed Voice, with dedicated circuits, and sub-function (4) Infrastructure Support. The Memorandum of Agreement (MOA), reference (c), in Annex L paragraph 5 provides additional detail in these areas regarding the responsibilities transferred to the Supporting Component, the Navy.

a. Dedicated circuits are data or voice communication pathways between two communicating systems. They may exist as a physical cable or logically (as a virtual circuit) and are for exclusive use and not shared.

b. Base Level Communications include all OSI Layer 1 (Physical Layer) to include Outside Plant and interior building horizontal structured cabling to the jack/face plate on the wall, in addition to voice, data and video services traversing said infrastructure. For the purpose of this instruction and in accordance with reference (c), only a sub-set of the above mentioned services were transferred, including switched voice services, switched data services, Integrated Services Digital Network (ISDN), etc., long Haul communications leaving JBPHH, and services ordered directly from Defense Information Systems Agency (DISA) Defense Information Technology Contracting Office via DISA Direct Order Entry were not transferred.

3. Scope. This instruction provides a general description of responsibilities and specific actions required to support the existing OSI Layer 1 infrastructure and the provisioning of new base level communications

services on JBPHH. For clarity, "Base Level Communications" as addressed in this instruction expressly excludes other ITSM sub-functions including wireless connectivity services (including radios, frequency management), Video Teleconference, computer networks (portions of OSI model above layer 1), Information Assurance and Multimedia / Visual Information. This Instruction applies to the JB6, CNRH N6, NCTAMS PAC N51, 647 CS, JBPHH Supported, and all tenant commands located on JBPHH.

a. In this instruction, JBPHH Supported components are all Air Force commands attached to JBPHH which are identified in Reference (c).

b. Tenants are any activity on JBPHH except as identified as "Supported" in Reference (c).

c. The following types of Base Level communications services are covered under this Instruction:

(1) Fixed Voice. Fixed voice on JBPHH is provided principally by the Joint Hawaii Information Transfer System (JHITS) contract and by the Hickam Private Branch Exchange System located in Bldg 1102; hereby known as the Avaya Switch. Additionally, there are a number of installed "key systems" that provide service.

(2) Infrastructure: Government (DoD) Owned Inside and Outside Plant Cable Facilities on JBPHH; hereby known as JBPHH OSI Layer-1.

d. This Instruction also provides the procedures and responsibilities required for the acquisition and provisioning of Base Level type communications services and OSI Layer-1 infrastructure.

4. Information

a. All JBPHH customers desiring Base Level communications services must submit their service requirements to their designated Unit-Level TCO. All Navy and JBPHH MCA Supported customers report all base level communications service problems to the Commander, Navy Installations Command Support Center (808) 244-4188.

b. Tenant commands on JBPHH desiring Base Level communications services must submit their services requirements to their component's TCO. Report all JHITS services problems to the JHITS Help Desk at (808)659-1444.

c. Funding from the demarcation point to the user interface or jack is the responsibility of the Supported organization either through Military Construction or other appropriated funds. Likewise, charges for any information technology equipment Moves, Adds, or Changes will be paid on a fee-for-service basis by the initiating unit for any AT&T services, or paid at the enterprise level if directed by the major command or higher level organization.

d. When relocation of large offices or the establishment of new offices involves a Navy Facilities Engineering or Civil Engineering renovation or construction project, the cost for all inside Plant (ISP) infrastructures (wiring, outlets, jacks, telecommunication cabling, conduit, cable trays, racks, cabinets, building protector assemblies, and passive termination devices such as patch panels and connector blocks) shall be funded for and included in the project's scope.

5. Responsibilities. All participants in the process will follow the Joint Base Communications Support Processes as described below and in the ITSM Process Flow Charts, Enclosure (1).

a. JBPHH Supported Components are responsible for:

(1) Funding to cover the cost of non-recurring and recurring charges associated with Air Force Network (IS) from the demarcation point to the computer) moves, adds, and/or changes (MAC).

(a) Fees for services based on established Contract Line Items (CLINs) and will be applicable to all moves, adds and changes as required.

(b) In compliance with TIA/EIA 568B and 569B and Unified Facilities Criteria 3-580-01 standards, Base Level Communications service providers (i.e. CHITS) now require "customer provided" supporting structures (conduits, cable trays, J-hooks, etc.) in the horizontal path between the Telephone Closet (or cabinet) and the user jack for all new service installations.

(2) Appointing Primary and Secondary Unit Level Telephone Control Officers. Unit Level TCOs are the individual(s) who authorize long distance toll access, DSN access, and act as the focal point for reviewing the organization's base level communications requirements and requests for services before submitting them to the JB6.

b. Unit Level TCOs are responsible for:

(1) Maintaining and validating inventory of all lines and services.

(2) Controlling misuse of Government provided lines and services in accordance with applicable U.S. Federal, Department of Defense, Air Force and Navy Directives and Instructions.

(3) Reviewing, approving and submitting customer service requests for Base level communications services, in accordance with Reference (d), to the JB6 (CNRH N6 via Cyberspace Infrastructure Planning System (CIPS) or as directed by the JB-6.

(4) Providing a detailed requirements description such as building number; floor and room numbers; points of contacts; and floor plans as required to support request for moves, adds, or changes of Base Level communications services.

(5) Coordinating actions (funding, space, access, escorts, environmental, etc.) for all supporting structure requirements (Building Inside Structured Cabling and Underground Ducts, Handholes, etc.) with the customer to support new JBPHH CPI Layer-1 cable or inside wire installation or as needed for base level communications requirements.

c. The JB is responsible for:

(1) Retaining, processing and routing all Air Force requirements.

(2) Operating, managing and maintaining all assigned JBPHH ISP Layer-1 copper and fiber circuits as required from the points of demarcation to the

user interface or jack in regards to Data Services as indicated in Enclosure (2).

(3) Coordinating with the JBC to resolve AFNET NIPR related issues.

(4) Completely connecting Digital Subscriber Line Access Multiplexer to (e.g. dry pair for DSL service) for AFNET connectivity.

d. JBPHH JBC is the TCO for all JBPHH Supported Components and is responsible for:

(1) Establishing Customer Service Accounts and maintaining a standing Job Order Number (JON) with the Navy BCC.

(2) Appointing JB Primary and Alternate TCO's by official letter to the Navy BCC Hawaii.

(3) Receiving, screening, approving and processing of CTPS inputs and other submissions for base level communications service requirements.

(a) Routing approved Avaya service orders to the appropriate contracted vendor providing Avaya support services.

(b) Submitting all requirements for JHITS services for JBPHH and MCA Supported commands to the Navy BCC by appropriate means of submittal. JHITS contract services include:

1. Maintenance of critical assured services.

2. Installation/Maintenance of Point-to-Point dedicated circuits ordered through the JHITS Contract.

3. Installation/Maintenance of outside plant copper and optical fiber cable appropriately turned over to the JHITS contractor as Category I (assigned and controlled by AT&T/JHITS, and notification to the government - approval from the government not required for AT&T to use cable pairs) or Category II (assigned and controlled by Government, and approval from the government required prior to use) cables.

(4) Overseeing on behalf of the JBC the maintenance of all communications ISP Layer-1 Inside Plant wiring and cables on JBPHH. For the purpose of this instruction, communications ISP facilities include the following:

(a) ISP distribution cables from the ISP cable protected termination to the demarcation point specified in Annex L of Reference (c).

(b) In-house wiring (Category-3, 5, or 6) providing voice connectivity from the protected ISP terminal and in-house distribution cable terminal to the user jack (as in Enclosure (1) - Breakdown of Responsibilities).

(5) Ownership and maintenance of the Avaya Switch.

e. Telephone Control Officers are responsible for:

(1) Submitting approved JHITS Service Requests to the Navy Base Communications Officer (BCO) representative.

(2) Coordinating actions (funding, space, environmental, etc.) for all supporting structure requirements (Building Inside Structured Cabling and Underground ducts, Hand holes, etc.) with the Naval Facilities Activity to support new JBPHH OSI Layer-1 cable or inside wire installation(s) as needed.

(3) Attending all Base Communications Control Board meetings as scheduled by the Navy BCO, Hawaii.

f. JBPHH Tenants are responsible for:

(1) Establishing Support Agreement Customer Service Accounts and maintaining a standing JCN with the Navy BCO.

(2) Appointing a TCO by official letter to the Navy BCO Hawaii.

g. NCTAMS PAC, N51, Navy Base Communications Officer (BCO) is responsible for managing Base Level Communications Services in accordance with reference (d). These responsibilities include but are not limited to the following:

(1) Establishing separate Customer Billing Accounts for JBPHH and all tenant components on JBPHH.

(a) Receiving funds and establishing customer unique JCN for JBPHH tenant components.

(b) Forwarding all working JHITS service inventories to the appropriate JBPHH tenant component's BCO Account for billing purposes.

(c) Providing TCOs with monthly billing information and rate changes as required.

(d) Providing TCO training to newly appointed TCOs as required.

(2) Receiving, approving, processing and tracking all Service Request for JHITS requirements.

(3) Operating and managing all OSP and ISP Layer-1 cable facilities on JBPHH to the designated demarcations (Enclosure 2).

(4) Assigning cable pair and/or fiber strands as required to support intra-base official communications service connection requirements by other authorized service providers.

(5) Ensuring transferred Combat Information Transport System fiber optic cables strands are available for use to the Air Force and Air Force is not charged any fees for those fiber cables where the requested connectivity exists with CITS infrastructure. At the time of transfer, AF will identify known future funded requirements, as would any other activity or program. These strands will be reserved by BCO for AF use and will be revalidated annually by BCO and AF. Either AF and/or BCO when AF has a requirement for connectivity, the request will be fielded by the BCO and if connectivity exists, regardless of who installed the cable, the requirement will be satisfied. If connectivity does not exist, the requestor will be encouraged

to fund and install media to meet the requirement. BCC will not assign over 80 percent capacity on a cable. The remaining 20 percent is held in reserve for contingencies. Operations and Maintenance (O&M) of transferred CITS cables will be the responsibility of the supporting Component (JBPHH CB-6).

(6) Performing site surveys, as required to determine a Technical Solution and Cost to the TCCs when OSI Layer-1 facilities are insufficient or unavailable to support new or restore existing voice or data services to customer locations.

(7) Developing, submitting, coordinating and tracking contractual actions for OSI Layer-1 facilities upgrades as required to support new requirements. Coordinate restoration of existing base level communications services as required.

(8) Performing Quality Assurance inspections and acceptance on newly installed Base Level Communications Infrastructure and cables.

A. B. JAMES

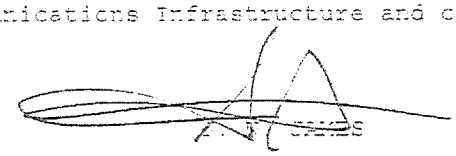

Distribution:
Electronic only via, https://g2.cnic.navy.mil/tscnrh/JOINTBASEPEARLHARBOR-HICKAMHI/JBPHH%20Instructions/Forms/Instructions.aspx

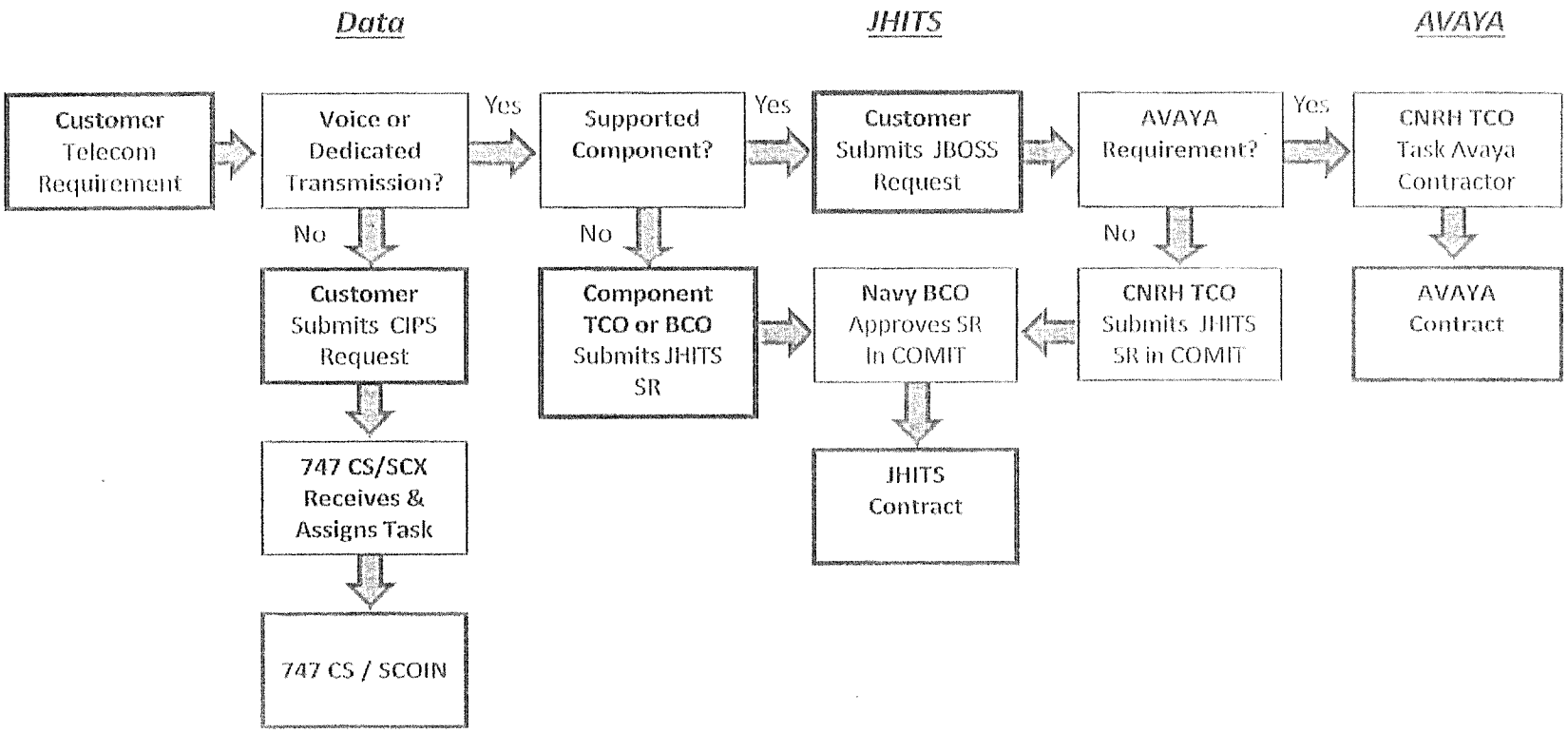

Joint Base Customer Service Support Processes – Air Force Customers

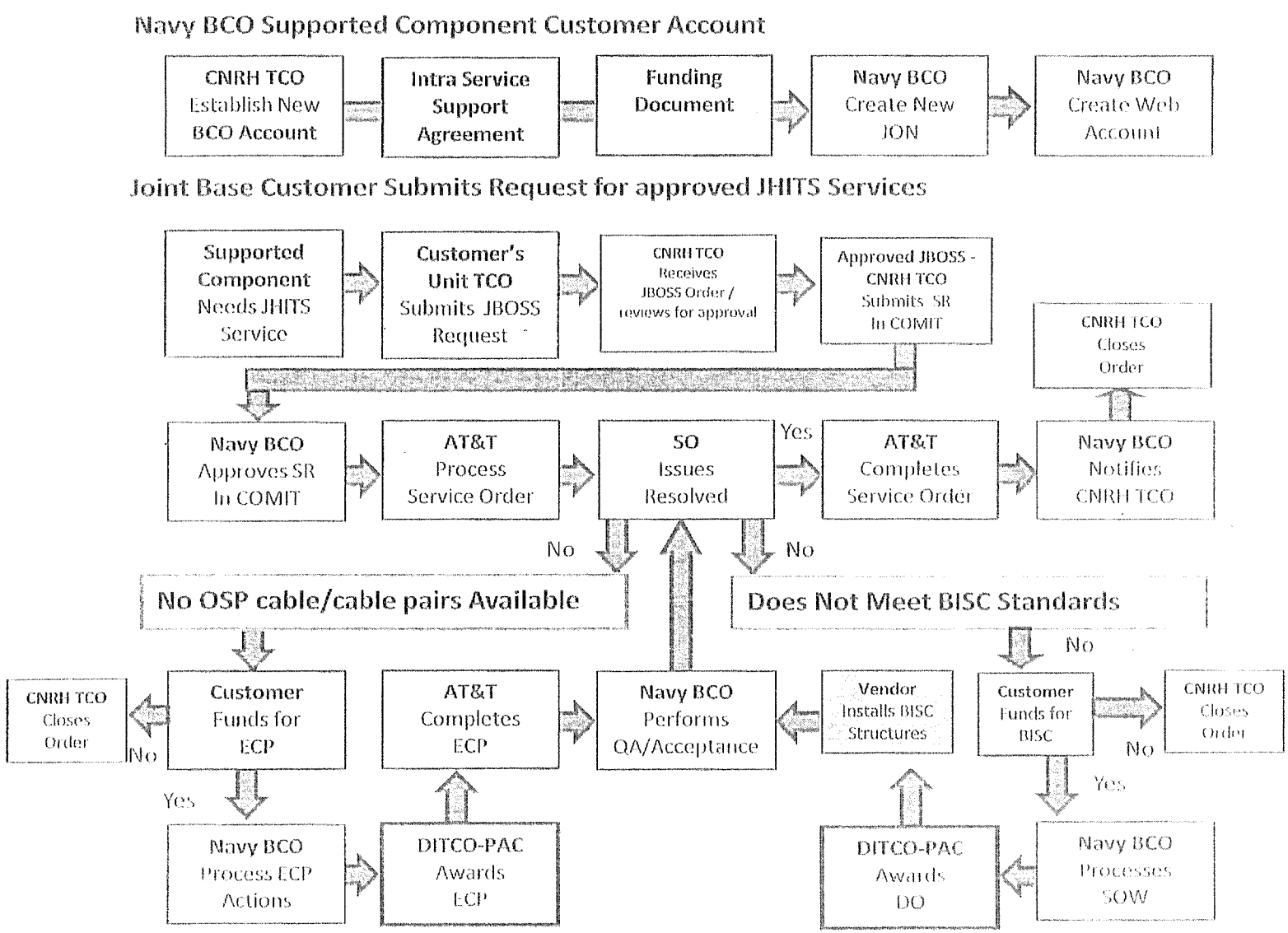

CNRH TCO Process for JHITS Service Request for Supported Customers

Navy BCO Customer Account: Joint Base Non-Supported Component

Joint Base Non-Supported Customer Submits Request for JHITS Services

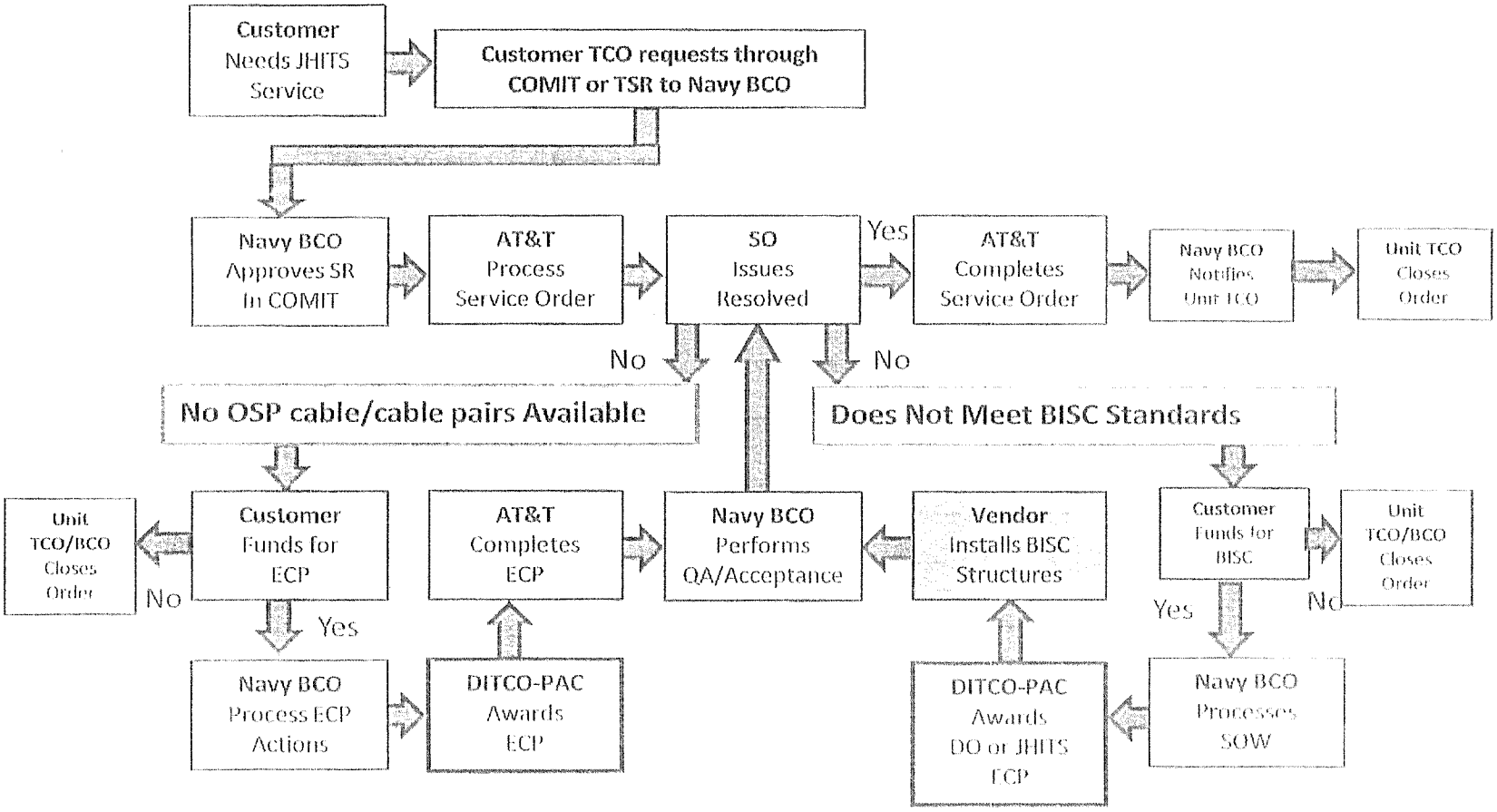

Non-Supported TCO Service Request Process for JHITS Services

Joint Base Customer Submits Request for Network Facilities

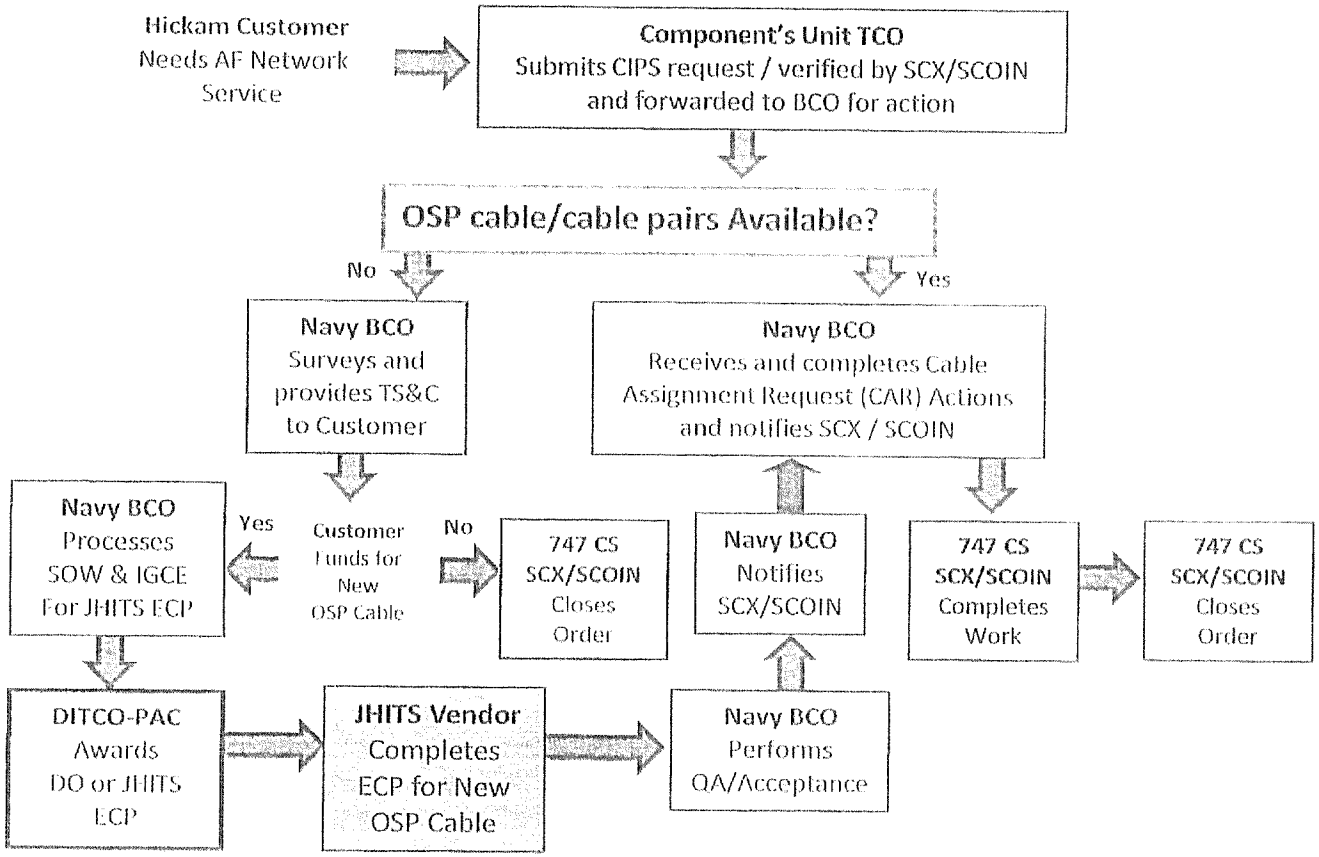

Network Request Process for OSI Layer 1 Facilities – JHITS (changed process to have BCO assign CAR prior to SCX/SCOIN Completes Work – green arrow for easier change identification

Joint Base Customer Submits Request for Network Facilities

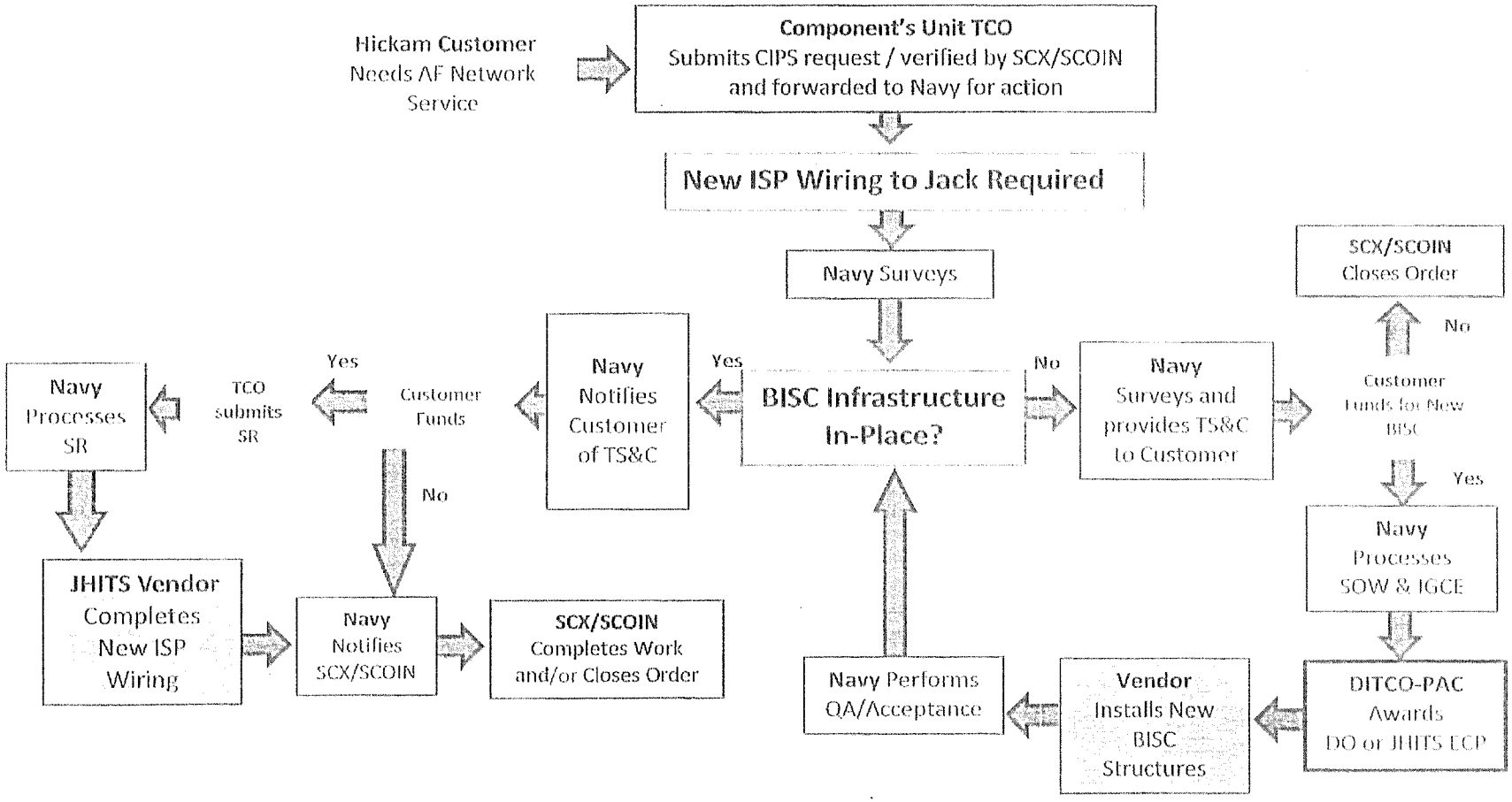

Network Request Process for ISP Facilities

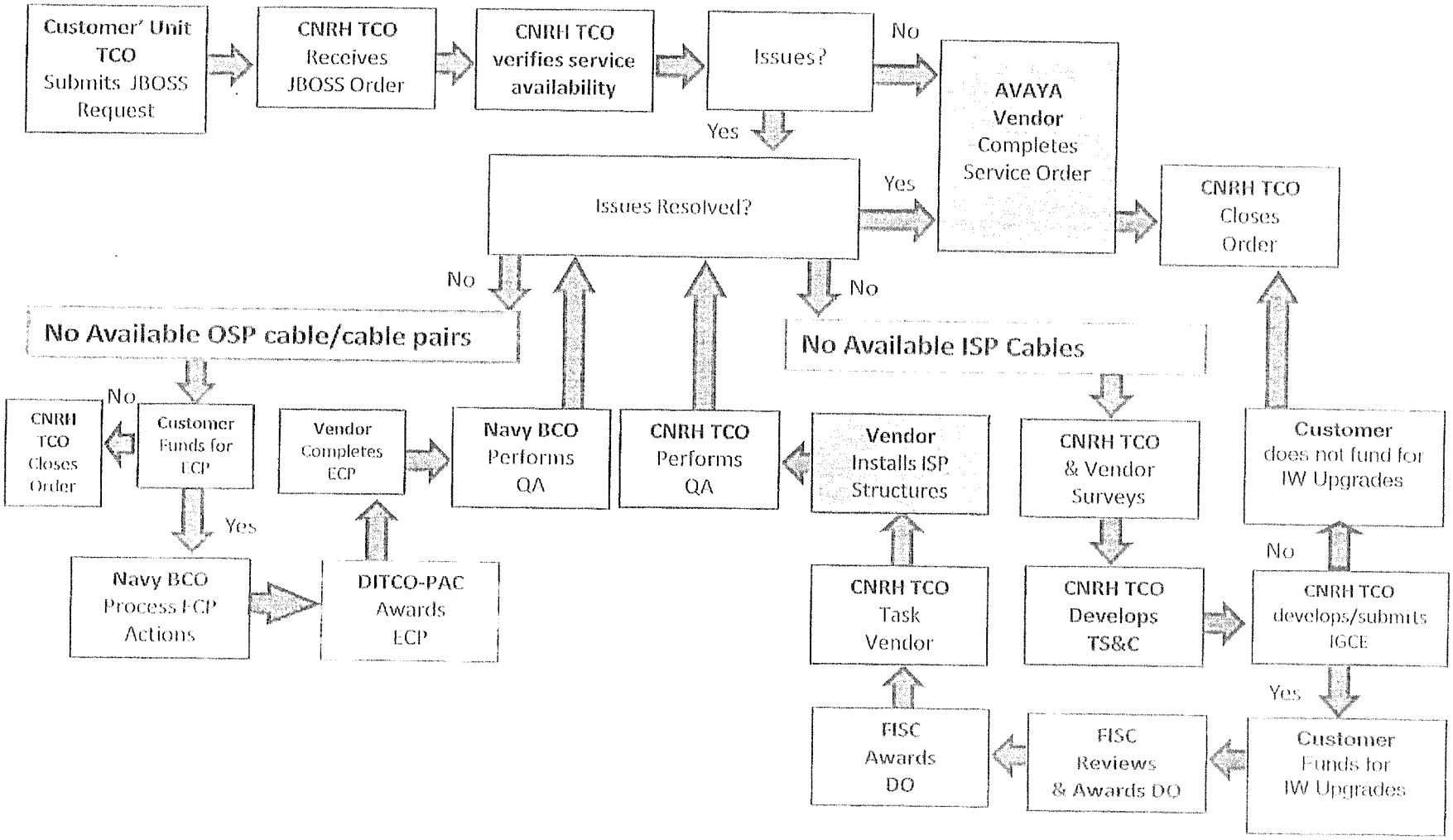

Air Force Supported Customer Submits Request for AVAYA Services

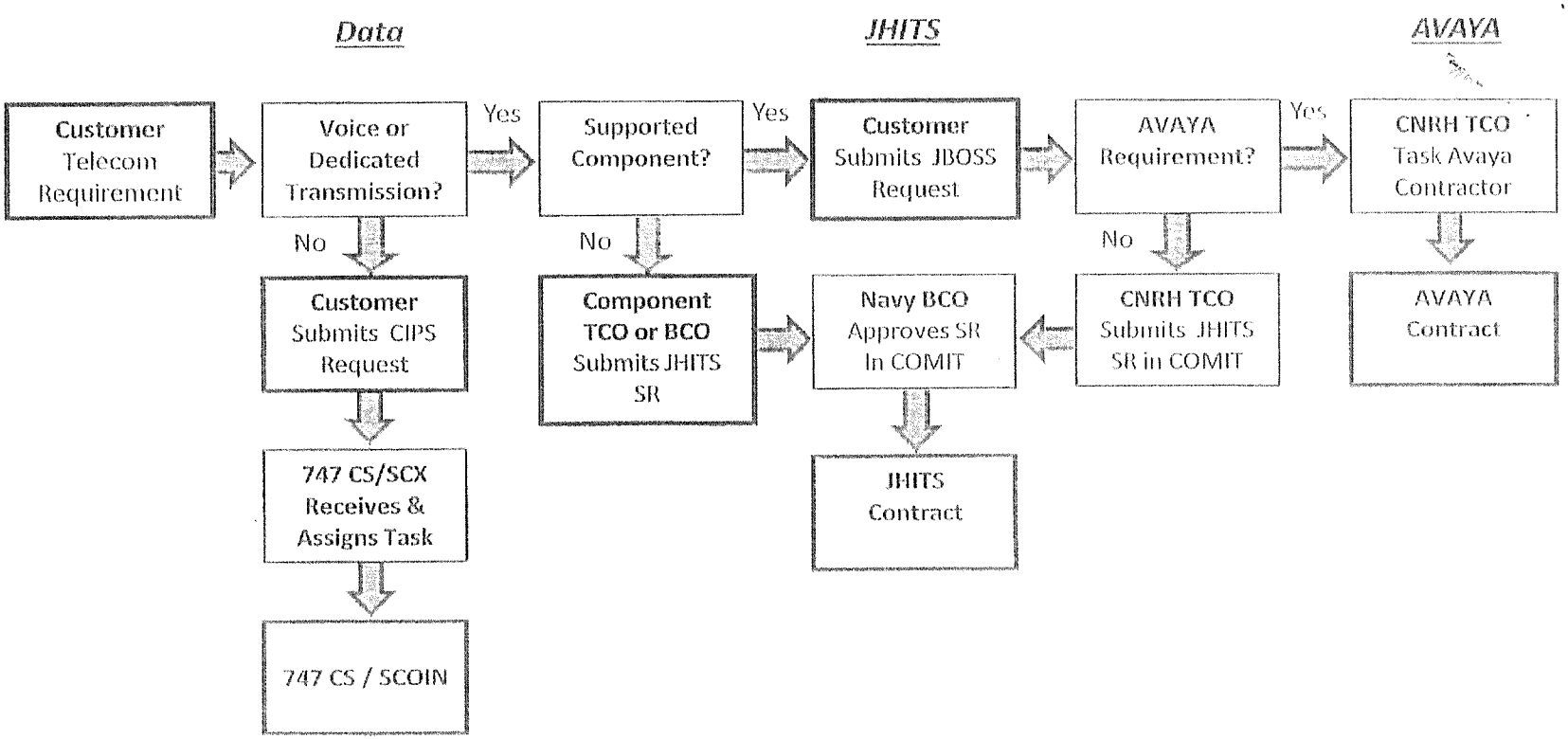

Joint Base Customer Service Support Processes – Air Force Customers

JBPHHTNST 2790.1
JUL 19 2012

Navy BCO Supported Component Customer Account

Joint Base Customer Submits Request for approved JHITS Services

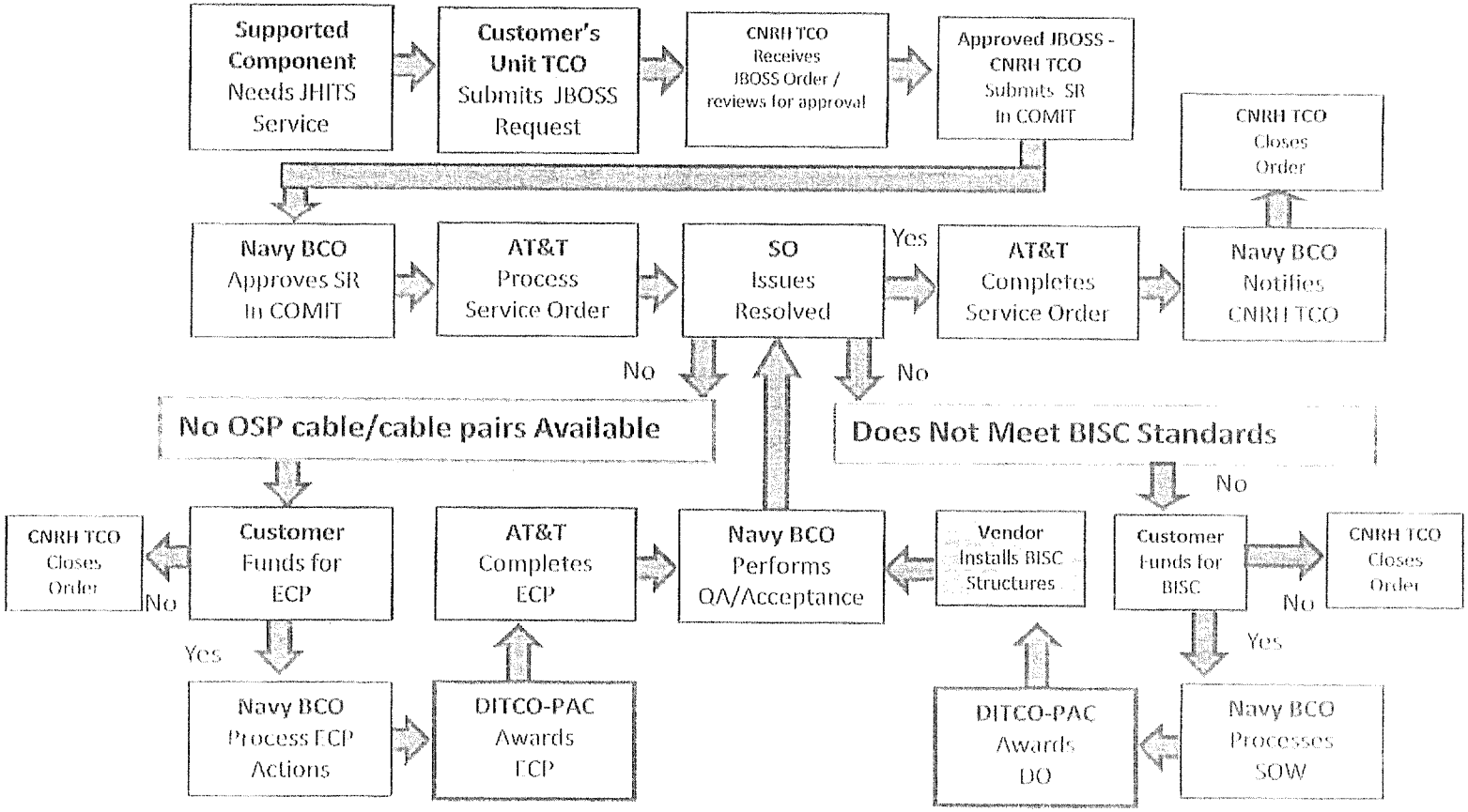

CNRH TCO Process for JHITS Service Request for Supported Customers

JBPHILNST 2790.1
JUL 1 9 2012

Navy BCO Customer Account: Joint Base Non-Supported Component

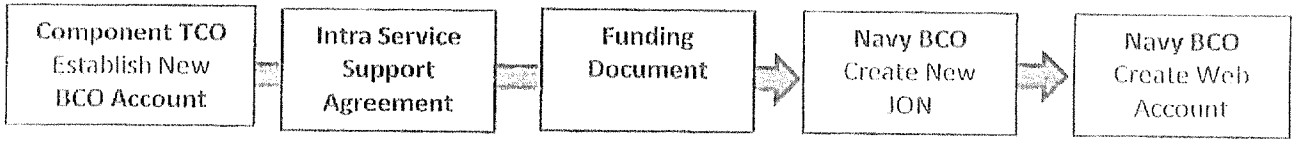

Joint Base Non-Supported Customer Submits Request for JHITS Services

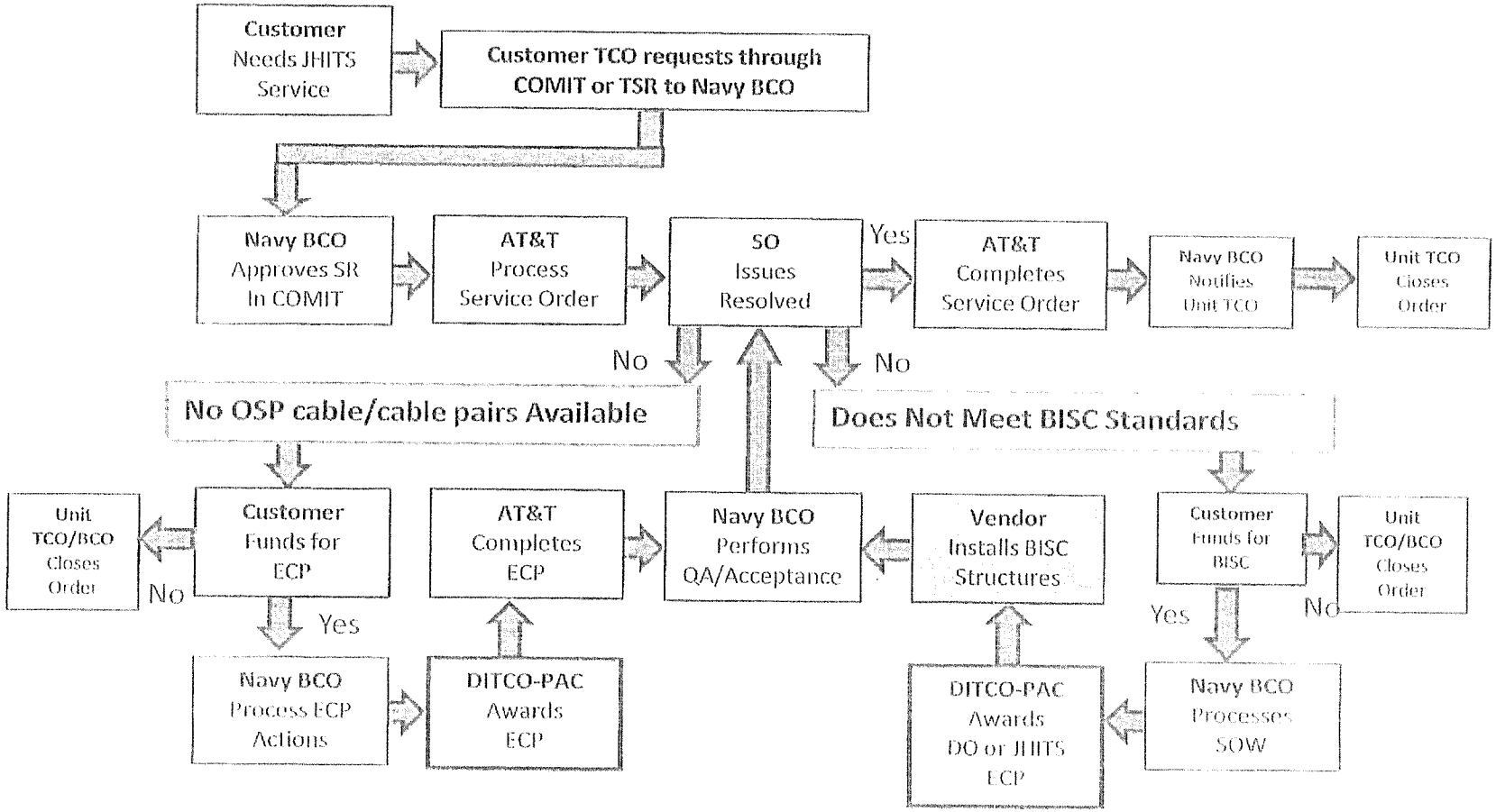

Non-Supported TCO Service Request Process for JHITS Services

Joint Base Customer Submits Request for Network Facilities

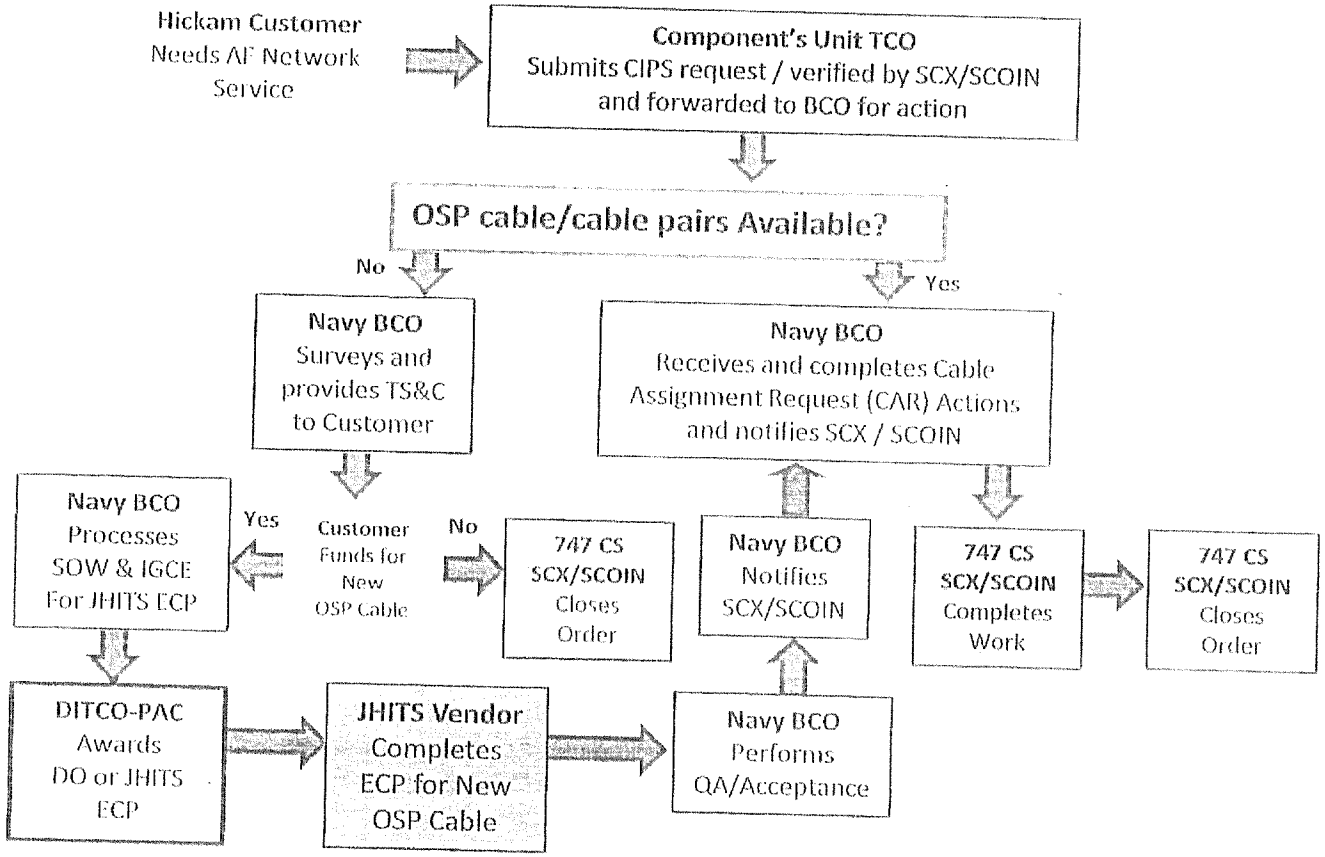

Network Request Process for OSI Layer 1 Facilities – JHITS (changed process to have BCO assign CAR prior to SCX/SCOIN Completes Work – green arrow for easier change identification

Joint Base Customer Submits Request for Network Facilities

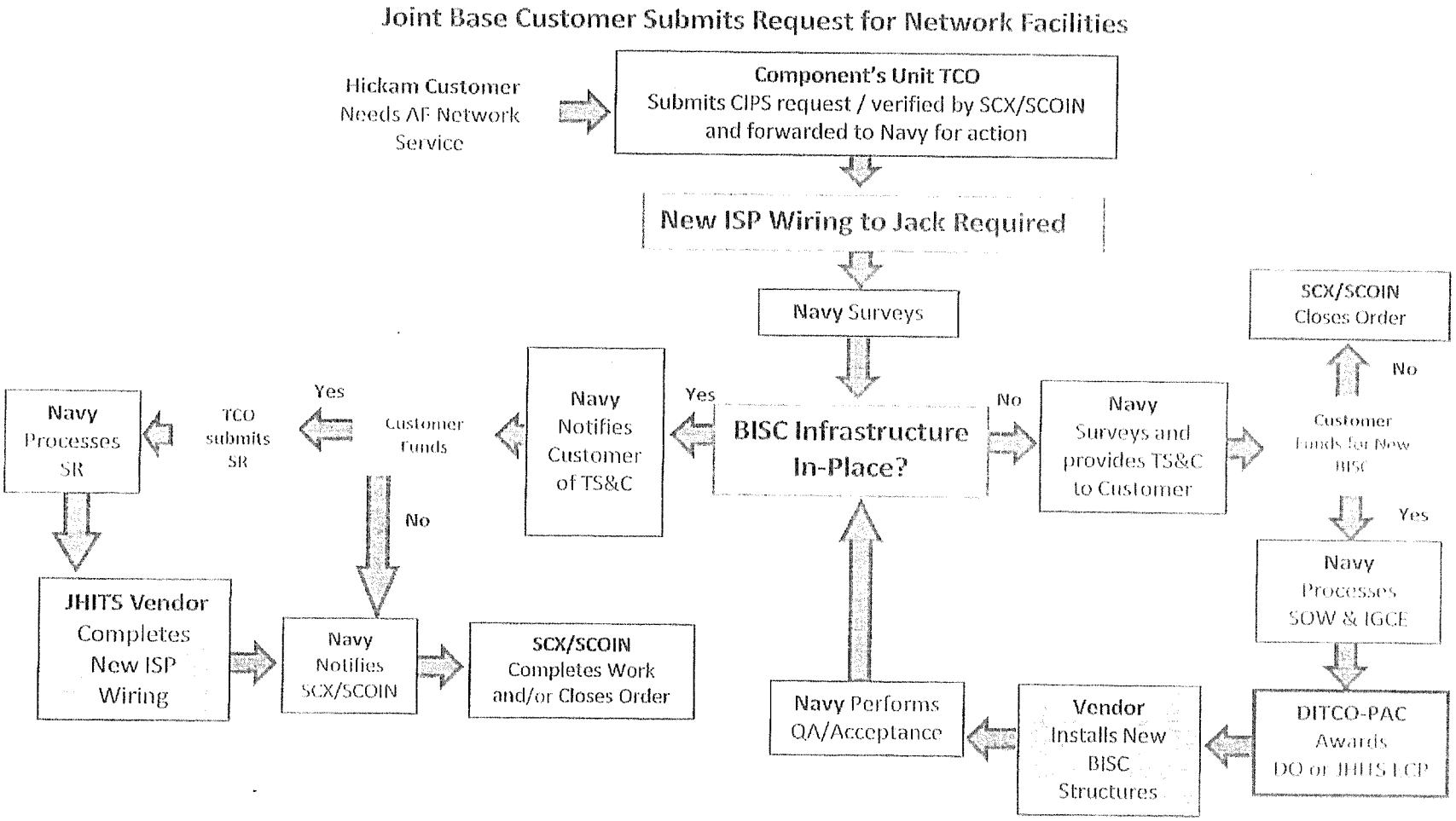

Network Request Process for ISP Facilities

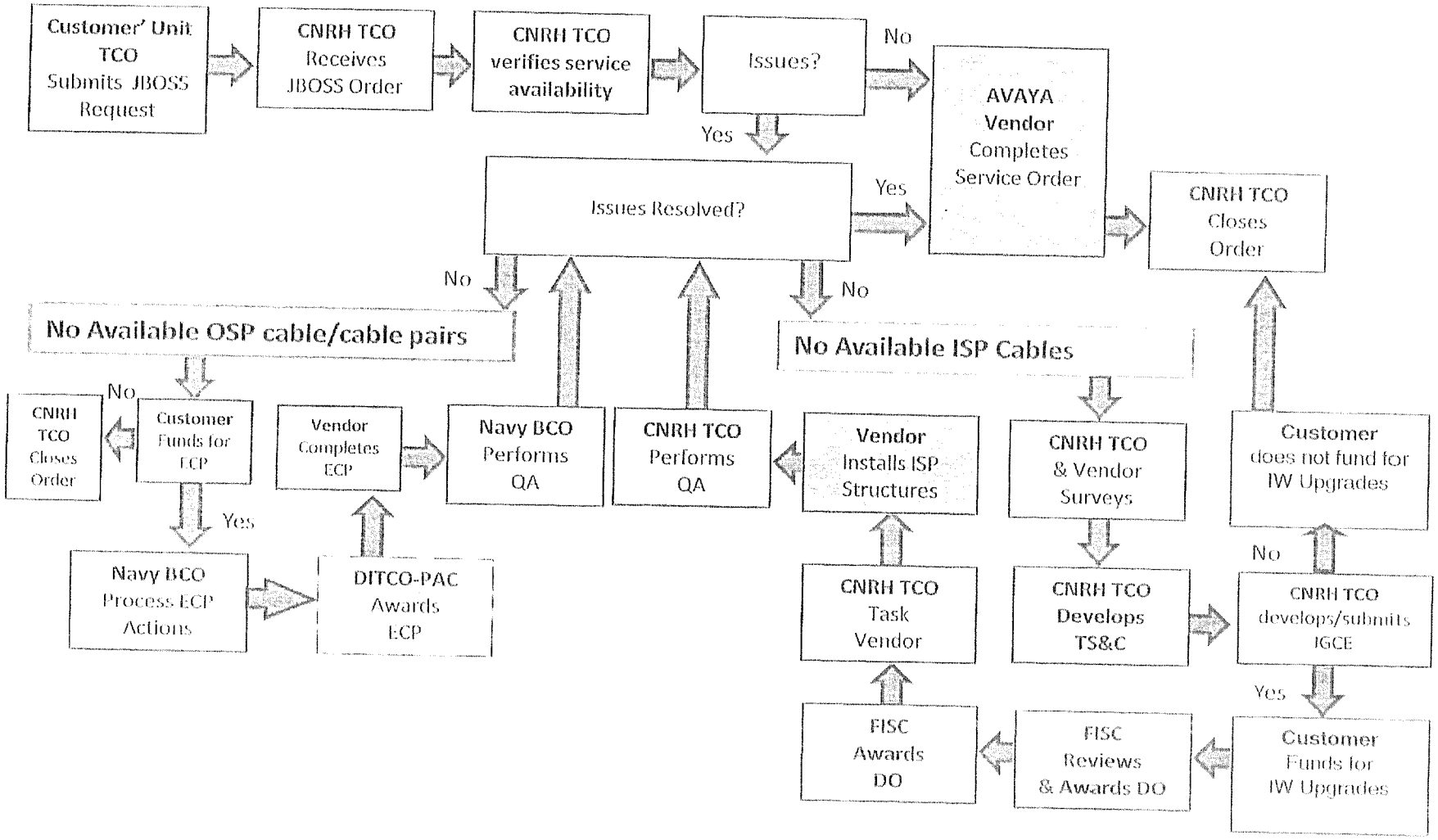

Air Force Supported Customer Submits Request for AVAYA Services

Layer-1 (ISP) Breakdown of Responsibilities – JHITS

Scenario 1: JHITS End-to-End Responsibility

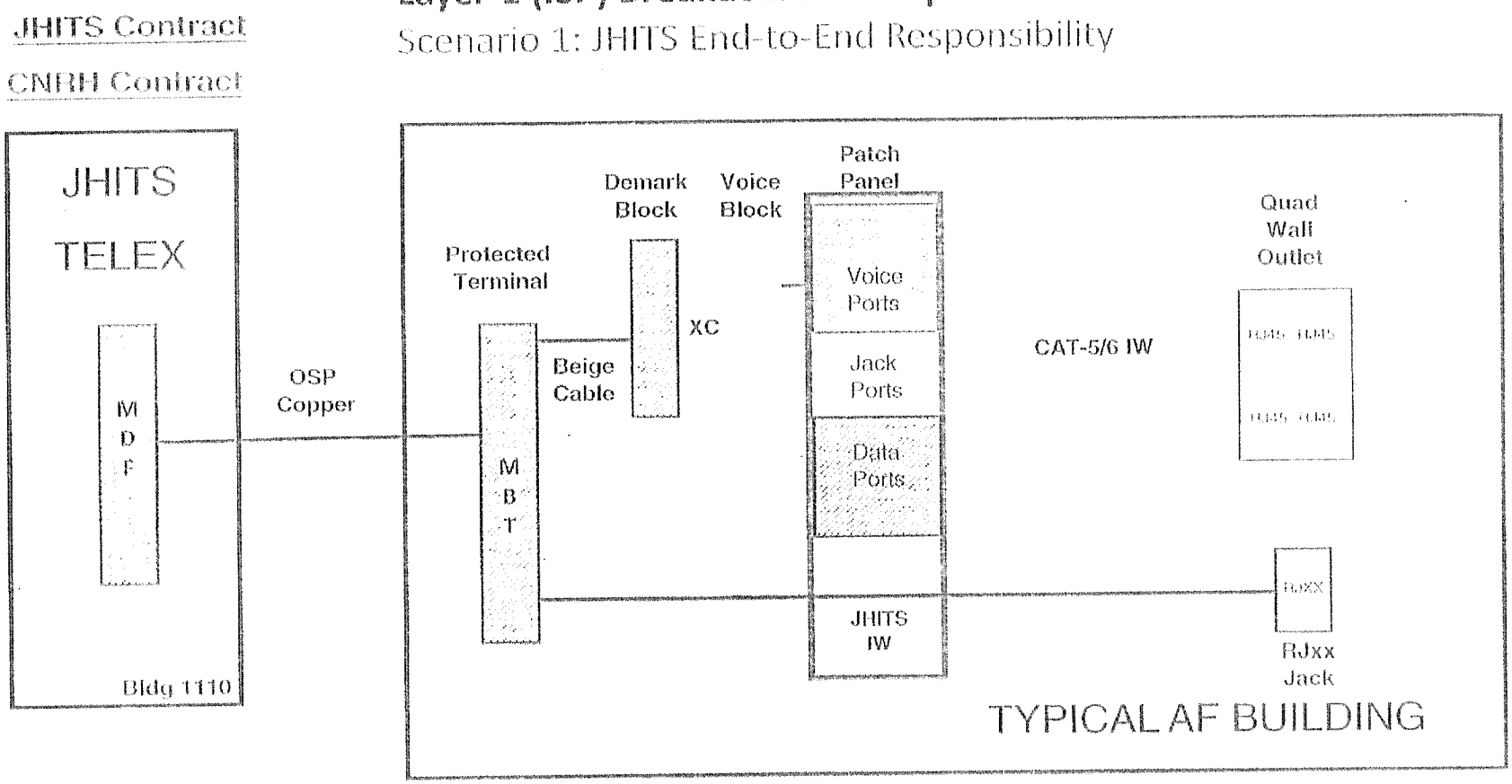

Layer-1 (ISP) Breakdown of Responsibilities – AVAYA

Scenerio-2: Responsibilities within Bldg 1102

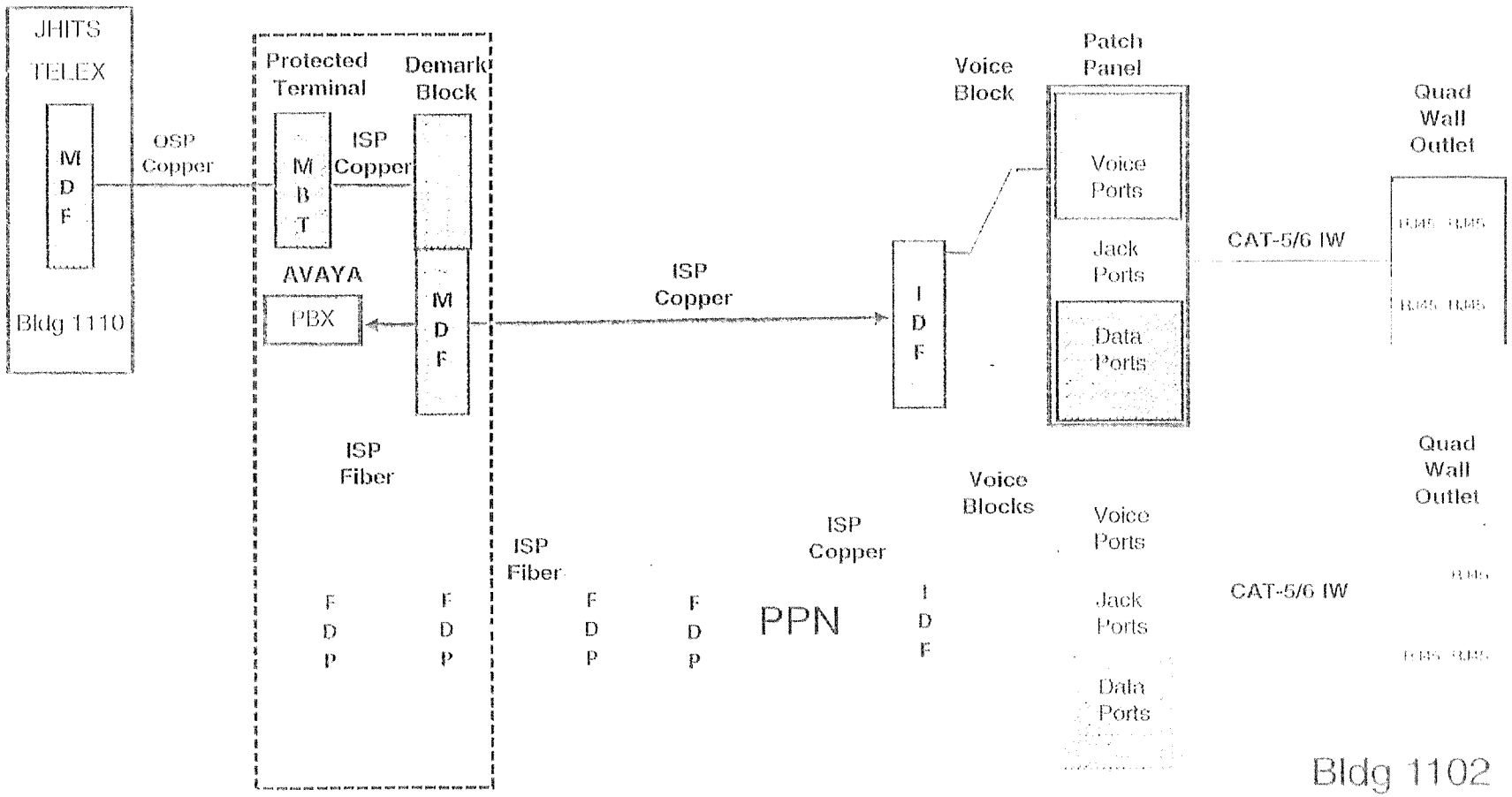

Layer-1 (ISP) Breakdown of Responsibilities – AVAYA

Scenerio-3: Responsibilities extending from Bldg 1102

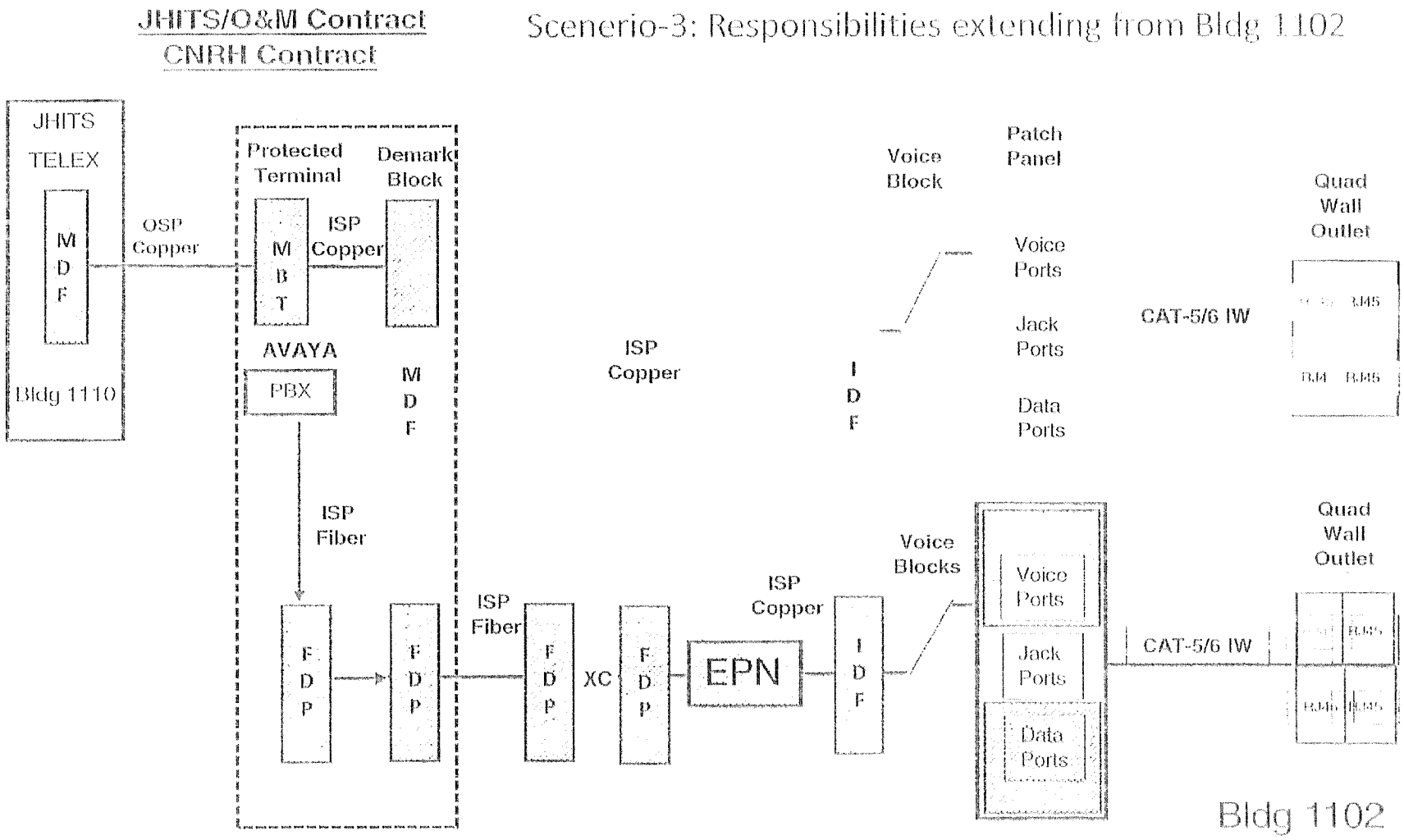

Layer-1 (ISP) Breakdown of Responsibilities – AVAYA

Scenerio-4 Bldg 1102: Copper to Other Location

CNRH Contact

NCTAMS Contact

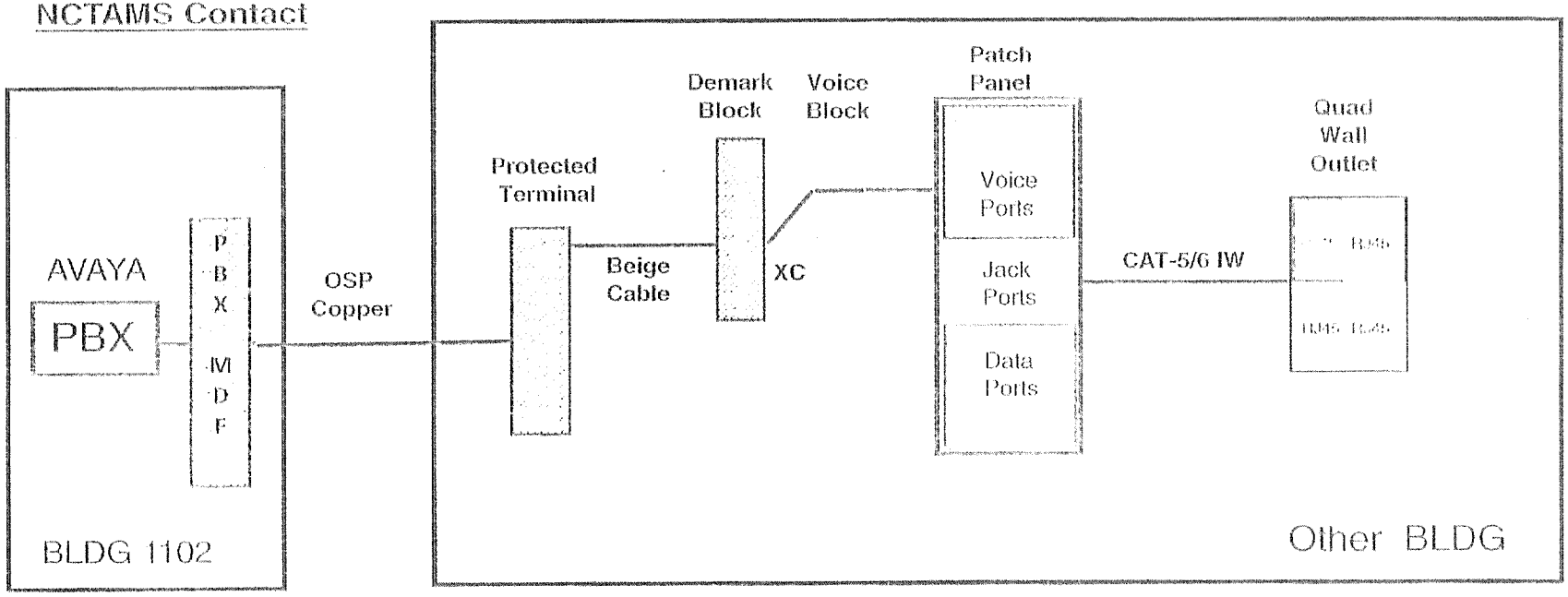

Layer-1 (ISP) Breakdown of Responsibilities – AVAYA

Scenario – 5: Remote EPN / Tie OSP Copper to Other Building(s)

CNRH Contact

NCTAMS Contact

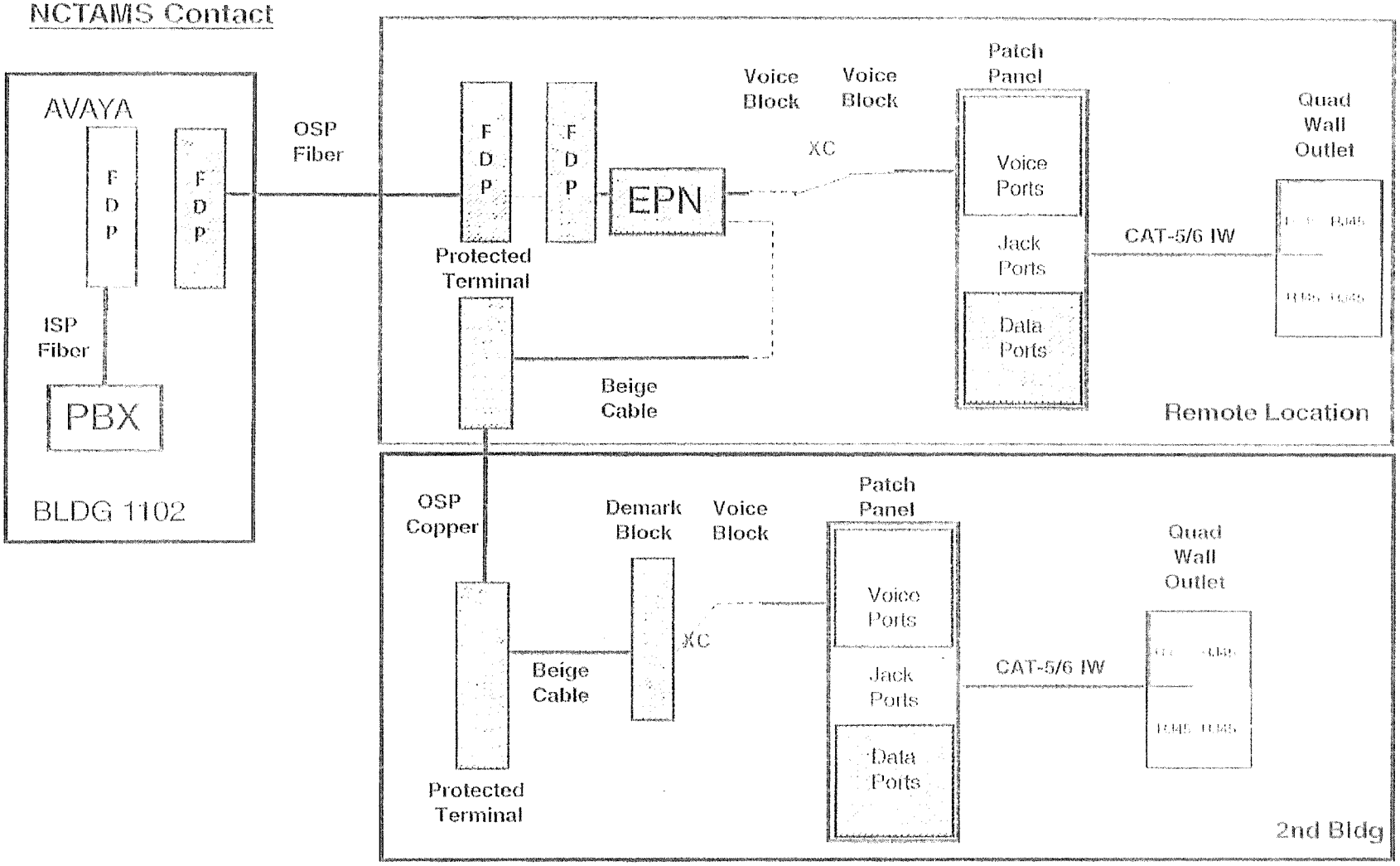

Layer-1 (ISP) Breakdown of Responsibilities – AF LAN

Scenario – 6: Non-JHITS OSP Fiber Cat-5/6 Wiring

CNRH Contact

NCTAMS Contact

747 CS SCOIN

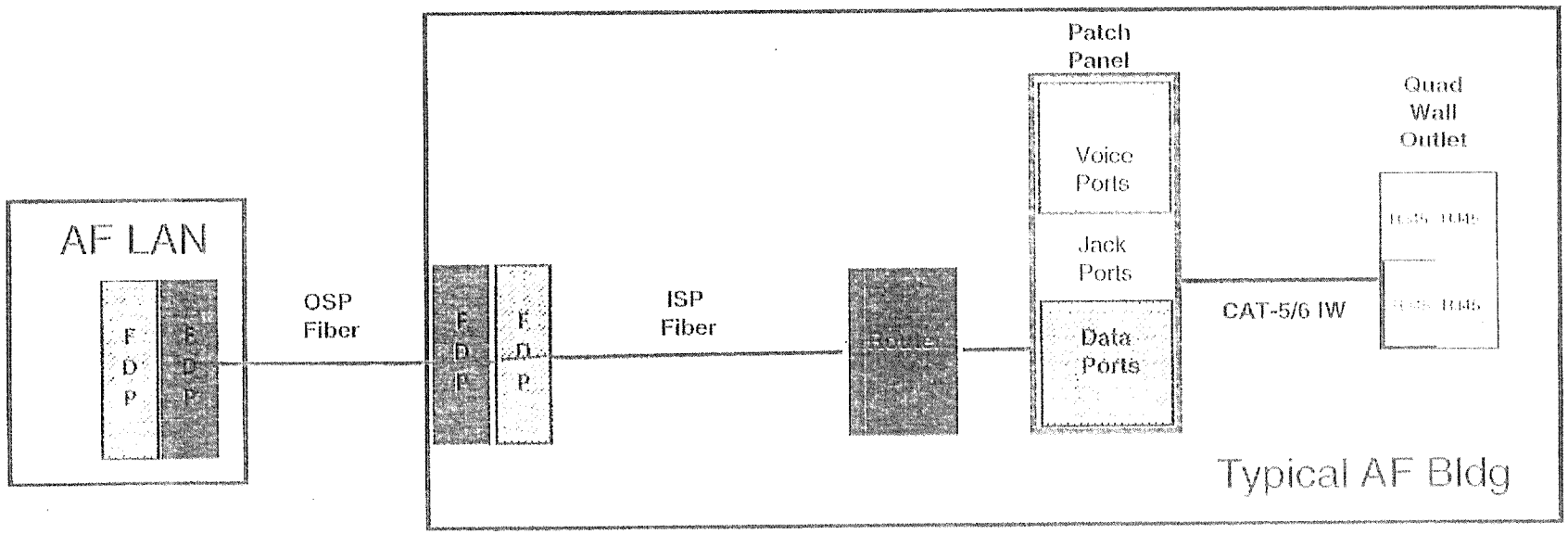

Glossary

Base Level Communications- Include but are not limited to all OSI Layer 1 Physical Layer to include Outside Plant (OSP) and interior building horizontal structured cabling to the jack/face plate on the wall, in addition to voice, data and video services traversing said infrastructure

Information Technology Services Management (ITSM)- As defined in Initial Guidance for BRAC 2005 Joint Basing Implementation (aka JBIG), Attachment D, page D-17 to D-20

Open Systems Interconnection (OSI) Model- As referenced in JBPHH Memorandum of Agreement was intended and continues to be defined as that specified in "Open Systems Interconnection (OSI) - Model and Notation" of the International Telecommunication Union-Telecommunication (ITU-T) Standardization Sector Recommendation X.200 (07/94) <http://www.itu.int/rec/T-REC-X.200-199407-I/en> This model is a prescription for characterizing and standardizing the functions of a communications system in terms of architecture layers.

OSI Layer 1: Physical Layer- Defines electrical and physical specifications for interconnection of communications equipment. In particular, it defines the relationship between a device and a transmission medium, such as a copper or fiber optical cable.