DRAFT FINAL

Munitions Response Program Preliminary Site Inspection

Naval Weapons Station Seal Beach, Seal Beach, CA

December 2008

Contract Number: N62472–02-D-1300
Task Order 22, Modification 02
Document Control Number: MPI-1300-0022-0004

MALCOLM PIRNIE

INDEPENDENT ENVIRONMENTAL ENGINEERS, SCIENTISTS AND CONSULTANTS

Malcolm Pirnie, Inc.
2000 Powell Street Suite 1180
Emeryville CA 94608
T: 510.596.3060 F: 510.596.8855
www.pirnie.com

December 19, 2008

Pei-Fen Tamashiro, PG
Naval Weapons Station Seal Beach
N45W, Building 110
800 Seal Beach Blvd.
Seal Beach, CA 90740-5000

Re: Draft Final Munitions Response Program Preliminary Site Inspection, Naval Weapons Station Seal Beach, Seal Beach, CA. Navy Preliminary Assessments for Munitions Response Ranges and Sites Contract N62472–02-D-1300 (Task Order 0022, Modification 02, Document Control Number MPI-1300-0022-0004)

Dear Ms. Pei-Fen Tamashiro,

Malcolm Pirnie is pleased to provide to the Naval Weapons Station Seal Beach Installation the Draft Final Munitions Response Program Preliminary Site Inspection, Naval Weapons Station Seal Beach, Seal Beach, CA. This report covers the following six Munitions Response Program sites at Naval Weapons Station Seal Beach:

- Primer/Salvage Yard
- POLB Mitigation Pond
- Buildings 101-102 Evaporation Ponds
- Building 94 Settling Basin
- Explosives Drop Test Tower (Building 436)
- Westminster POLB Fill Area

One copy of the Draft Final Preliminary Site Inspection report has been provided. Comments on the Draft Final report are requested within 30 days (by January 18, 2009). After comments are received on the Draft Final version, the Final PA will be submitted within 30 days (by February 17, 2009).

If you have any questions or comments please feel free to contact me at (510) 735-3029.

Very truly yours,

MALCOLM PIRNIE, INC.

Monique De Jesus

Team Leader, Naval Weapons Station Seal Beach

Distribution:

Jennifer Sullivan – Naval Facilities Engineering Command Southwest

Patricia Hannon – California Regional Water Quality Control Board, Santa Ana Region

Stephen Niou – California Environmental Protection Agency, Department of Toxic Substances Control

Lee Wittenberg – City of Seal Beach

DRAFT FINAL
PRELIMINARY SITE INSPECTION
NAVAL WEAPONS STATION SEAL BEACH
SEAL BEACH, CALIFORNIA

DECEMBER 2008

Prepared for:

NAVAL WEAPONS STATION SEAL BEACH
Naval Facilities Engineering Command Southwest
1220 Pacific Highway
San Diego, CA 92132

Prepared by:

MALCOLM PIRNIE, INC.
2000 Powell Street Suite 1180
Emeryville, CA 94608

DRAFT FINAL
PRELIMINARY SITE INSPECTION
NAVAL WEAPONS STATION SEAL BEACH
SEAL BEACH, CALIFORNIA

DoD Contract Number: N62472-02-D-1300

Reviewed and Approved by:

_____ Jeffrey R. Bennett, P.E., DEE
Program Officer
Malcolm Pirnie, Inc.

_____ Monique De Jesus, P.E.
Team Leader
Malcolm Pirnie, Inc.

Malcolm Pirnie, Inc., prepared this report at the direction of Naval Facilities Engineering Command Atlantic. This document should be used only with the approval of the Naval Facilities Engineering Command Atlantic. This report is based, in part, on information provided in other documents and is subject to the limitations and qualifications presented in the referenced documents.

DECEMBER 2008

TABLE OF CONTENTS

ACRONYMS ..... **IX**

GLOSSARY OF TERMS ..... **XI**

EXECUTIVE SUMMARY **ES-1**

1.0 INTRODUCTION **1-1**

1.1. PURPOSE **1-2**
1.2. PROGRAMMATIC FRAMEWORK **1-2**
1.3. PROJECT MANAGEMENT **1-3**
1.4. PSI APPROACH **1-3**
2.0 INSTALLATION BACKGROUND **2-1**

2.1. LOCATION AND SETTING **2-1**
2.2. INSTALLATION HISTORY **2-1**
2.3. MUNITIONS RELATED TRAINING/STORAGE/USAGE **2-3**
3.0 PHYSICAL AND ENVIRONMENTAL CHARACTERISTICS **3-1**

3.1. CLIMATE **3-1**
3.2. TOPOGRAPHY **3-1**
3.3. GEOLOGY **3-1**
3.4. SOIL AND VEGETATION TYPES **3-2**
3.5. HYDROLOGY **3-3**
3.6. HYDROGEOLOGY **3-3**
3.7. CULTURAL AND NATURAL RESOURCES **3-4**
3.8. ENDANGERED AND SPECIAL STATUS SPECIES **3-5**
4.0 SUMMARY OF DATA COLLECTION EFFORT **4-1**

4.1. HISTORICAL ARCHIVE REPOSITORIES (OFF-SITE) **4-1**
4.2. PERSONAL COMMUNICATIONS **4-3**
4.3. ON-SITE DATA REPOSITORIES **4-4**
4.4. VISUAL SURVEY **4-4**
4.5. OFF-SITE DATA SOURCES **4-5**
5.0 SITE CHARACTERISTICS **5-1**

5.1. PRIMER/SALVAGE YARD **5-1**
5.1.1. *History and Site Description* *5-1*
5.1.1.1. Topography 5-7
5.1.1.2. Geology 5-7
5.1.1.3. Soil and Vegetation Types 5-7
5.1.1.4. Hydrology 5-7
5.1.1.5. Hydrogeology 5-7
5.1.1.6. Cultural and Natural Resources 5-8
5.1.1.7. Endangered and Special Status Species 5-8
5.1.2. *Visual Survey Observations and Results* *5-8*
5.1.3. *Munitions and Munitions Related Materials Associated with the Site* *5-11*
5.1.4. *MEC Presence* *5-11*
5.1.4.1. Known MEC Areas 5-12
5.1.4.2. Suspected MEC Areas 5-12
5.1.4.3. Areas Not Suspected to Contain MEC 5-12
5.1.5. *Ordnance Penetration Estimates* *5-12*

5.1.6. MC *5-13*
5.1.7. Contaminant Migration Routes *5-13*
5.1.8. Receptors *5-14*
5.1.8.1. Nearby Populations 5-14
5.1.8.2. Buildings Near/Within Site 5-14
5.1.8.3. Utilities On/Near Site 5-14
5.1.9. Land Use *5-14*
5.1.10. Access Controls/Restrictions *5-15*
5.1.11. CSM *5-15*
5.1.12. Summary *5-27*
5.2. POLB MITIGATION POND 5-35
5.2.1. History and Site Description *5-35*
5.2.1.1. Bathymetry 5-36
5.2.1.2. Geology 5-38
5.2.1.3. Soil and Vegetation Types 5-38
5.2.1.4. Hydrology 5-38
5.2.1.5. Hydrogeology 5-38
5.2.1.6. Cultural and Natural Resources 5-39
5.2.1.7. Endangered and Special Status Species 5-39
5.2.2. Visual Survey Observations and Results *5-39*
5.2.3. Munitions and Munitions Related Materials Associated with the Site *5-42*
5.2.4. MEC Presence *5-42*
5.2.4.1. Known MEC Areas 5-43
5.2.4.2. Suspected MEC Areas 5-43
5.2.5. Ordnance Penetration Estimates *5-43*
5.2.6. MC *5-43*
5.2.7. Contaminant Migration Routes *5-43*
5.2.8. Receptors *5-44*
5.2.8.1. Nearby Populations 5-44
5.2.8.2. Buildings Near/Within Site 5-44
5.2.8.3. Utilities On/Near Site 5-44
5.2.9. Land Use *5-44*
5.2.10. Access Controls/Restrictions *5-44*
5.2.11. CSM *5-44*
5.2.12. Summary *5-56*
5.3. BUILDINGS 101-102 EVAPORATION PONDS 5-63
5.3.1. History and Site Description *5-63*
5.3.1.1. Topography 5-67
5.3.1.2. Geology 5-68
5.3.1.3. Soil and Vegetation Types 5-68
5.3.1.4. Hydrology 5-68
5.3.1.5. Hydrogeology 5-68
5.3.1.6. Cultural and Natural Resources 5-69
5.3.1.7. Endangered and Special Status Species 5-69
5.3.2. Visual Survey Observations and Results *5-69*
5.3.3. Munitions and Munitions Related Materials Associated with the Site *5-72*
5.3.4. MEC Presence *5-72*
5.3.4.1. Known MEC Areas 5-72
5.3.4.2. Suspected MEC Areas 5-72
5.3.4.3. Areas Not Suspected to Contain MEC 5-73
5.3.5. Ordnance Penetration Estimates *5-73*

5.3.6. MC *5-73*
5.3.7. Contaminant Migration Routes *5-73*
5.3.8. Receptors *5-73*
5.3.8.1. Nearby Populations 5-73
5.3.8.2. Buildings Near/Within Site 5-73
5.3.8.3. Utilities On/Near Site 5-74
5.3.9. Land Use *5-74*
5.3.10. Access Controls/Restrictions *5-74*
5.3.11. CSM *5-74*
5.3.12. Summary *5-85*
5.4. BUILDING 94 SETTLING BASIN 5-92
5.4.1. History and Site Description *5-92*
5.4.1.1. Topography 5-94
5.4.1.2. Geology 5-94
5.4.1.3. Soil and Vegetation Types 5-94
5.4.1.4. Hydrology 5-95
5.4.1.5. Hydrogeology 5-95
5.4.1.6. Cultural and Natural Resources 5-95
5.4.1.7. Endangered and Special Status Species 5-95
5.4.2. Visual Survey Observations and Results *5-96*
5.4.3. Munitions and Munitions Related Materials Associated with the Site *5-97*
5.4.4. MEC Presence *5-97*
5.4.4.1. Known MEC Areas 5-97
5.4.4.2. Suspected MEC Areas 5-98
5.4.4.3. Areas Not Suspected to Contain MEC 5-98
5.4.5. Ordnance Penetration Estimates *5-98*
5.4.6. MC *5-98*
5.4.7. Contaminant Migration Routes *5-98*
5.4.8. Receptors *5-98*
5.4.8.1. Nearby Populations 5-99
5.4.8.2. Buildings Near/Within Site 5-99
5.4.8.3. Utilities On/Near Site 5-99
5.4.9. Land Use *5-99*
5.4.10. Access Controls/Restrictions *5-99*
5.4.11. CSM *5-99*
5.4.12. Summary *5-110*
5.5. EXPLOSIVES DROP TEST TOWER (BUILDING 436) 5-118
5.5.1. History and Site Description *5-118*
5.5.1.1. Topography 5-119
5.5.1.2. Geology 5-119
5.5.1.3. Soil and Vegetation Types 5-119
5.5.1.4. Hydrology 5-120
5.5.1.5. Hydrogeology 5-120
5.5.1.6. Cultural and Natural Resources 5-120
5.5.1.7. Endangered and Special Status Species 5-121
5.5.2. Visual Survey Observations and Results *5-121*
5.5.3. Munitions and Munitions Related Materials Associated with the Site *5-123*
5.5.4. MEC Presence *5-123*
5.5.4.1. Known MEC Areas 5-124
5.5.4.2. Suspected MEC Areas 5-124
5.5.4.3. Areas Not Suspected to Contain MEC 5-124

5.5.5. Ordnance Penetration Estimates *5-124*
5.5.6. MC *5-124*
5.5.7. Contaminant Migration Routes *5-124*
5.5.8. Receptors *5-125*
5.5.8.1. Nearby Populations 5-125
5.5.8.2. Buildings Near/Within Site 5-125
5.5.8.3. Utilities On/Near Site 5-125
5.5.9. Land Use *5-125*
5.5.10. Access Controls/Restrictions *5-125*
5.5.11. CSM *5-125*
5.5.12. Summary *5-132*
5.6. WESTMINSTER POLB FILL AREA 5-142
5.6.1. History and Site Description *5-142*
5.6.1.1. Topography 5-143
5.6.1.2. Geology 5-143
5.6.1.3. Soil and Vegetation Types 5-143
5.6.1.4. Hydrology 5-143
5.6.1.5. Hydrogeology 5-143
5.6.1.6. Cultural and Natural Resources 5-144
5.6.1.7. Endangered and Special Status Species 5-144
5.6.2. Visual Survey Observations and Results *5-144*
5.6.3. Munitions and Munitions Related Materials Associated with the Site *5-146*
5.6.4. MEC Presence *5-146*
5.6.4.1. Known MEC Areas 5-146
5.6.4.2. Suspected MEC Areas 5-146
5.6.4.3. Areas Not Suspected to Contain MEC 5-147
5.6.5. Ordnance Penetration Estimates *5-147*
5.6.6. MC *5-147*
5.6.7. Contaminant Migration Routes *5-147*
5.6.8. Receptors *5-148*
5.6.8.1. Nearby Populations 5-148
5.6.8.2. Buildings Near/Within Site 5-148
5.6.8.3. Utilities On/Near Site 5-148
5.6.9. Land Use *5-148*
5.6.10. Access Controls/Restrictions *5-148*
5.6.11. CSM *5-149*
5.6.12. Summary *5-160*

APPENDICES

Appendix A: References

Appendix B: Project Source Data – General

Appendix C: Project Source Data – Site-Specific

C-1: Primer/Salvage Yard

C-2: Port of Long Beach Mitigation Pond

C-3: Buildings 101-102 Evaporation Ponds

C-4: Building 94 Settling Basin

C-5: Explosives Drop Test Tower (Building 436)

C-6: Westminster Port of Long Beach Fill Area

Appendix D: Ordnance Technical Data Sheets

Appendix E: Response to Comments and Concurrences

MAPS

MAP 2.1-1: AREA LOCATION MAP....2-7

MAP 5.1-1: VISUAL SURVEY: PRIMER/SALVAGE YARD....5-29

MAP 5.1-2: SITE DETAILS: PRIMER/SALVAGE YARD....5-31

MAP 5.1-3: MUNITIONS CHARACTERIZATION: PRIMER/SALVAGE YARD....5-33

MAP 5.2-1: VISUAL SURVEY: POLB MITIGATION POND....5-57

MAP 5.2-2: SITE DETAILS: POLB MITIGATION POND....5-59

MAP 5.2-3: MUNITIONS CHARACTERIZATION: POLB MITIGATION POND....5-61

MAP 5.3-1: VISUAL SURVEY: BUILDINGS 101-102 EVAPORATION PONDS....5-86

MAP 5.3-2: SITE DETAILS: BUILDINGS 101-102 EVAPORATION PONDS....5-88

MAP 5.3-3: MUNITIONS CHARACTERIZATION: BUILDINGS 101-102 EVAPORATION PONDS....5-90

MAP 5.4-1: VISUAL SURVEY: BUILDING 94 SETTLING BASIN....5-111

MAP 5.4-2: SITE DETAILS: BUILDING 94 SETTLING BASIN....5-114

MAP 5.4-3: MUNITIONS CHARACTERIZATION: BUILDING 94 SETTLING BASIN....5-116

MAP 5.5-1: VISUAL SURVEY: EXPLOSIVES DROP TEST TOWER....5-136

MAP 5.5-2: SITE DETAILS: EXPLOSIVES DROP TEST TOWER....5-138

MAP 5.5-3: MUNITIONS CHARACTERIZATION: EXPLOSIVES DROP TEST TOWER....5-140

MAP 5.6-1: VISUAL SURVEY: WESTMINSTER POLB FILL AREA....5-160

MAP 5.6-2: SITE DETAILS: WESTMINSTER POLB FILL AREA....5-163

MAP 5.6-3: MUNITIONS CHARACTERIZATION: WESTMINSTER POLB FILL AREA....5-165

FIGURES

FIGURE 5.1-1: 1965 AERIAL PHOTOGRAPH SHOWING EXTENT OF PRIMER/SALVAGE YARD AND THE POLB MITIGATION POND....5-2

FIGURE 5.1-2: IRP SITE 16 PRIMER/SALVAGE YARD....5-3

FIGURE 5.1-3: VIEW OF THE LOCKED GATE ENTERING THE FENCED YARD, FACING EAST 5-9

FIGURE 5.1-4: VIEW OF THE PAVED AREA INSIDE THE FENCED YARD LOOKING NORTH. SCALE IS LIKELY BUILDING 412 (ADJACENT TO BUILDING 413). 5-9

FIGURE 5.1-5: 2.75-INCH PRACTICE WARHEAD, COLORED BLUE (PHOTOGRAPH TAKEN DURING THE NOVEMBER 2007 ON-SITE VISUAL SURVEY.) 5-10

FIGURE 5.1-6: BLU-36 (T-1) HALF HEMISPHERE 5-10

FIGURE 5.1-7: EXPENDED PD FUZE 5-10

FIGURE 5.1-8: EXPENDED PTTF 5-10

FIGURE 5.1-9: 5.56-MM SMALL ARMS CASINGS 5-11

FIGURE 5.1-10: 50-CALIBER CARTRIDGE CASINGS 5-11

FIGURE 5.1-11: PRIMER/SALVAGE YARD MEC EXPOSURE PATHWAY ANALYSIS 5-25

FIGURE 5.1-12: PRIMER/SALVAGE YARD MC EXPOSURE PATHWAY ANALYSIS 5-26

FIGURE 5.2-1: 1965 AERIAL PHOTOGRAPH SHOWING EXTENT OF PRIMER/SALVAGE YARD AND POSSIBLE EOD AND/OR SAFETY DEMONSTRATION AREAS 5-35

FIGURE 5.2-2: GRADING PLAN FOR 7TH STREET POLB MITIGATION POND, 1988 5-37

FIGURE 5.2-3: VIEW THE NORTHERN BANK OF THE POLB MITIGATION POND 5-40

FIGURE 5.2-4: VIEW OF THE POLB MITIGATION POND FROM THE NORTHWEST BANK, FACING SOUTHEAST 5-40

FIGURE 5.2-5: THREE CARTRIDGE CASES SUBMERGED ALONG THE NORTHWESTERN BANK OF THE POLB MITIGATION POND. 5-41

FIGURE 5.2-6: VIEW OF A BASE PLATE WITH A LIVE PRIMER 5-41

FIGURE 5.2-7: PARTIAL 20-MM CARTRIDGE 5-41

FIGURE 5.2-8: POLB MITIGATION POND MEC EXPOSURE PATHWAY ANALYSIS 5-54

FIGURE 5.2-9: POLB MITIGATION POND MC EXPOSURE PATHWAY ANALYSIS 5-55

FIGURE 5.3-1. 1958 ENGINEERING DIAGRAM SHOWING CONCRETE BASINS AT BUILDING 98 5-64

FIGURE 5.3-2: 1990 FINAL REPORT SI SAMPLE LOCATIONS 5-66

FIGURE 5.3-3: 1998 IRP FINAL (REVISION 1) OU-4 SI REPORT SAMPLE LOCATIONS 5-66

FIGURE 5.3-4: 1956 AERIAL PHOTOGRAPH SHOWING EVAPORATION PONDS AND SITE CONFIGURATION 5-67

FIGURE 5.3-5: VIEW OF EAST SIDE OF BUILDING 98 WITH CONCRETE BASIN ON SOUTHERN SIDE 5-70

FIGURE 5.3-6: VIEW OF CONCRETE SETTLING BASIN AND FORMER CONCRETE TANK CRADLES ON SOUTH SIDE OF BUILDING 98. CONCRETE CHANNEL DRAINS TO IRP SITE 2 EVAPORATION PONDS. 5-70

FIGURE 5.3-7: VIEW EAST OF BUILDINGS 101-102 EXPLOSIVE D FORMER WASH WATER POND (IRP SITE 3) 5-71

FIGURE 5.3-8: BUILDINGS 101-102 EVAPORATION PONDS MC EXPOSURE PATHWAY ANALYSIS 5-84

FIGURE 5.4-1: 1944 ENGINEERING DIAGRAM WITH DRAIN PIPE AND SETTLING BASIN TO EAST OF BUILDING 94 5-93

FIGURE 5.4-2: 1947 AERIAL PHOTOGRAPH WITH SETTLING BASIN VISIBLE TO THE EAST OF BUILDING 94 5-94

FIGURE 5.4-3: VIEW OF SOUTHEAST SIDE OF BUILDING 94 5-96

FIGURE 5.4-4: BUILDING 94 SETTLING BASIN MEC EXPOSURE PATHWAY ANALYSIS ... 5-108

FIGURE 5.4-5: BUILDING 94 SETTLING BASIN MC EXPOSURE PATHWAY ANALYSIS 5-109

FIGURE 5.5-1: SAMPLING LOCATIONS FOR IRP SITE 24 NOTED IN THE SI FINAL REPORT 5-119

FIGURE 5.5-2: VIEW OF THE WEST SIDE OF THE EXPLOSIVES DROP TEST TOWER 5-122

FIGURE 5.5-3: VIEW OF THE EAST SIDE OF THE EXPLOSIVES DROP TEST TOWER AND BERMED SURROUNDINGS 5-122

FIGURE 5.5-4: EXPLOSIVES DROP TEST TOWER MC EXPOSURE PATHWAY ANALYSIS . 5-134

FIGURE 5.6-1: LOOKING EAST FROM WESTMINSTER STREET. 5-145

FIGURE 5.6-2: LOOKING WEST FROM WESTMINSTER STREET 5-145

FIGURE 5.6-3: WESTMINSTER POLB FILL AREA MEC EXPOSURE PATHWAY ANALYSIS 5-158

FIGURE 5.6-4: WESTMINSTER POLB FILL AREA MC EXPOSURE PATHWAY ANALYSIS .. 5-159

TABLES

TABLE 3.3-1: SUMMARY OF NAVWPNSTA SEAL BEACH FORMATIONS 3-2

TABLE 3.8-1: SUMMARY OF PROTECTED SPECIES ON NAVWPNSTA SEAL BEACH 3-5

TABLE 5.1-1: CSM INFORMATION PROFILES – PRIMER/SALVAGE YARD 5-16

TABLE 5.2-1: CSM INFORMATION PROFILES – PORT OF LONG BEACH MITIGATION POND 5-45

TABLE 5.3-1: CSM INFORMATION PROFILES – BUILDINGS 101-102 EVAPORATION PONDS 5-75

TABLE 5.4-1: CSM INFORMATION PROFILES – BUILDING 94 SETTLING BASIN 5-100

TABLE 5.5-1: CSM INFORMATION PROFILES – EXPLOSIVES DROP TEST TOWER 5-126

TABLE 5.6-1: CSM INFORMATION PROFILES – WESTMINSTER POLB FILL AREA 5-149

This page intentionally is blank.

ACRONYMS

Acronym	Definition
°F	degree Fahrenheit
µg/g	microgram per gram
asl	above sea level
bgs	below ground surface
C4	composition 4
CAD	cartridge actuated device
CD	compact disc
CDFG	California Department of Fish & Game
CEQA	California Environmental Quality Act
CERCLA	Comprehensive Environmental Response, Compensation and Liability Act
CNPS	California Native Plant Species
COPC	constituents of potential concern
CSM	conceptual site model
CWM	chemical warfare materiel
DERP	Defense Environmental Restoration Program
DMM	discarded military munitions
DoD	Department of Defense
DU	depleted uranium
EOD	Explosive Ordnance Disposal
FUDS	Formerly Used Defense Site
FY	fiscal year
HMX	High Melting Point Explosive
IAS	Initial Assessment Study
INRMP	Installation Natural Resource Management Plan
IRP	Installation Restoration Program
MC	munitions constituents
MEC	munitions and explosives of concern
mm	millimeter
MMRP	Military Munitions Response Program
MRP	Munitions Response Program
N	Nitrogen
NAND	Naval Ammunition and Net Depot
NAVFAC	Naval Facilities Engineering Command
NAVFACSW	Naval Facilities Engineering Command Southwest
NAVWPNSTA	Naval Weapons Station

Acronym	Definition
NWR	National Wildlife Refuge
OU	operable unit
PA	Preliminary Assessment
PAD	propellant actuated device
PD	point detonating
POLB	Port of Long Beach
PSI	preliminary site inspection
PTTF	powder train time fuze
Qal	Alluvial and Coastal Deposits
RDX	Royal Demolition Explosive
RG	Record Group
SARA	Superfund Amendments and Reauthorization Act
SI	Site Inspection
TKN	Total Kjeldahl Nitrogen
TNT	Trinitrotoluene
ULBV	Upper Level Background Value
U.S.	United States
USACE	United States Army Corps of Engineers
U.S.C.	United States Code
USEPA	United States Environmental Protection Agency
UXO	Unexploded Ordnance
UXOSS	UXO Safety Supervisor

GLOSSARY OF TERMS

Base Realignment and Closure – A Department of Defense (DoD) program that focuses on compliance and cleanup efforts at military installations undergoing closure or re-alignment, as authorized by Congress in five rounds of base closures for 1988, 1991, 1993, 1995, and 2005. (DERP Management Guidance, September 2001)

Closed Range – A range that has been taken out of service as a range and that either has been put to new uses that are incompatible with range activities or is not considered by the military to be a potential range area. A closed range is still under the control of a DoD component. (DERP Management Guidance, September 2001)

Defense Site – All locations that are or were owned by, leased to, or otherwise possessed or used by the DoD. The term does not include any operational range, operating storage or manufacturing facility, or facility that is used or was permitted for the treatment or disposal of military munitions. (10 U.S.C. 2710(e)(1))

Discarded Military Munitions (DMM) – Military munitions that have been abandoned without proper disposal or removed from storage in a military magazine or other storage area for the purpose of disposal. The term does not include unexploded ordnance, military munitions that are being held for future use or planned disposal, or military munitions that have been properly disposed consistent with applicable environmental laws and regulations. (10 U.S.C. 2710(e)(2))

Explosive Ordnance Disposal (EOD) – The detection, identification, field evaluation, rendering-safe, recovery, and final disposal of unexploded explosive ordnance. It may also include the rendering-safe and/or disposal of explosive ordnance that has become hazardous by damage or deterioration, when disposal of such explosive ordnance requires techniques, procedures, or equipment that exceed the normal requirements for routine disposal. (OPNAVINST 8027.1G, 14 Feb 92)

Explosives Safety – A condition where operational capability and readiness, personnel, property, and the environment are protected from the unacceptable effects of an ammunition or explosives mishap. (DoD Directive 6055.9, July 1996)

Formerly Used Defense Site (FUDS) – Real property that was formerly owned by, leased by, possessed by, or otherwise under the jurisdiction of the Secretary of Defense or the components (including governmental entities that are the legal predecessors of the DoD or the components) and those real properties where accountability rested with the DoD, but where activities at the property were conducted by contractors (i.e., government-owned, contractor-operated properties) that were transferred from DoD control prior to October 17, 1986. The status of a site as a FUDS is irrespective of current ownership or current responsibility within the federal government. (DERP Management Guidance, September 2001)

Munitions and Explosives of Concern (MEC) – This term, which distinguishes specific categories of military munitions that may pose unique explosives safety risks, means unexploded ordnance, discarded military munitions, or munitions constituents (e.g., trinitrotoluene (TNT), hexogen (RDX)) present in high enough concentrations to pose an explosive hazard. (OUSD (AT&L), 18 December 2003)

Munitions Constituents (MC) – Any materials originating from unexploded ordnance, discarded military munitions or other military munitions, including explosive and nonexplosive materials, and emission, degradation, or breakdown elements of such ordnance or munitions. (10 U.S.C. 2710 (e)(3))

Operational Range – A range that is under the jurisdiction, custody, or control of the Secretary of Defense and that is used for range activities or, although not currently being used for range activities, that is still considered by the Secretary to be a range and has not been put to a new use that is incompatible with range activities. (10 U.S.C. 101 (e)(3))

Other than Operational Range – This term encompasses closed, transferred, and transferring ranges.

Range – A designated land or water area set aside, managed, and used for range activities of the DoD. Ranges include firing lines and positions, maneuver areas, firing lanes, test pads, detonation pads, impact areas, electronic scoring sites, buffer zones with restricted access and exclusionary areas, and airspace areas designated for military use in accordance with regulations and

procedures prescribed by the Administrator of the Federal Aviation Administration. (10 U.S.C. 101(e)(3))

Transferred Range – A property formerly used as a military range that is no longer under military control and had been leased by the DoD, transferred, or returned from the DoD to another entity, including federal entities. This includes a range that is no longer under military control but was used under the terms of a withdrawal, executive order, special-use permit or authorization, right-of-way, public land order, or other instrument issued by the federal land manager. (DERP Management Guidance, September 2001)

Transferring Range – A range that is proposed to be transferred or returned from the DoD to another entity, including federal entities. This includes a range that is used under the terms of a withdrawal, executive order, act of Congress, special-use permit or authorization, right-of-way, public land order, or other instrument issued by the federal land manager or property owner. An operational or closed range will not be considered a "transferring range" until the transfer is imminent. (DERP Management Guidance, September 2001)

Unexploded Ordnance (UXO) – Military munitions that have been primed, fused, armed, or otherwise prepared for action; have been fired, dropped, launched, projected, or placed in such a manner as to constitute a hazard to operations, installations, personnel, or material; and remain unexploded either by malfunction, design, or any other cause. (10 U.S.C. 101(e)(5))

This page intentionally is blank.

EXECUTIVE SUMMARY

The Department of Defense (DoD) has established the Military Munitions Response Program under the Defense Environmental Restoration Program to address munitions and explosives of concern (MEC) (including unexploded ordnance and discarded military munitions) and munitions constituents (MC) at other than operational military ranges and other sites. Closed, transferred, and transferring military ranges and sites not located on an operational range are considered other than operational. This report addresses other than operational ranges and sites at an active installation.

This report represents a Preliminary Site Inspection (PSI) for Naval Weapons Station (NAVWPNSTA) Seal Beach, located in Seal Beach, California. The DoD, United States Navy, and United States Environmental Protection Agency guidance for conducting and documenting preliminary assessments were followed and tailored, where appropriate, to address the unique aspects of MEC and MC.

NAVWPNSTA Seal Beach is a 5,000-acre facility located approximately 26 miles south of the Los Angeles urban center within the city of Seal Beach in Orange County, California. Approximately 911 acres in the southwest portion of the station have been designated as the Seal Beach National Wildlife Refuge (NWR), which provides habitat for the federally endangered light-footed clapper rail (*Rallus longirostris levipes*) and other species. Major urban areas surrounding NAVWPNSTA Seal Beach are the cities of Long Beach, Westminster, Huntington Beach, Los Alamitos, and Seal Beach. The station was commissioned in 1944 as a Naval Ammunition and Net Depot. In 1962, the installation was redesignated Naval Weapons Station Seal Beach. It is one of several weapons stations maintained by the Navy to provide fleet combatants with ready-for-use ordnance. The station includes headquarters with central and administrative support for detachments as well as waterfront, storage, testing, and production facilities that support the station's mission. The station's mission is to receive, store, and guard large quantities of explosives and ammunition and to distribute and deliver them as needed to other installations.

This PSI covers the following six munitions sites at NAVWPNSTA Seal Beach: 1) Primer/Salvage Yard, 2) Port of Long Beach (POLB) Mitigation Pond, 3) Buildings 101-102 Evaporation Ponds, 4) Building 94 Settling Basin, 5) Explosives Drop Test Tower (Building

436), and 6) Westminster POLB Fill Area. The findings and recommendations for each of these ranges are summarized below.

Primer/Salvage Yard

The 46-acre Primer/Salvage Yard is located south of Bolsa Avenue, east of 7th Street, west of 9th Street, and north of the northern bank of the 7th Street POLB Mitigation Pond. The pond marks the southern boundary of the Primer/Salvage Yard. The northern bank of the 7th Street POLB Mitigation Pond marks its southern boundary. Approximately 24 acres of the Primer/Salvage Yard site are fenced with a locked gate. The Primer/Salvage Yard and associated storage area were used from 1944 through the late 1990s in conjunction with rocket segregation, inspection, and repackaging; bomb and rocket overhaul (e.g., 2.75- and 7.2-inch); and projectile (e.g., 20- to 40-millimeter [mm]) segregation, inspection, and repackaging. It is also reported that thousands of projector casings and damaged ammunition items were stored in the Primer/Salvage Yard area (NEESA, 1985). During the PSI site visit, potential MEC and munitions related items were noted inside the fenced yard. Based on historical documents, interviews, and visual survey, the Primer/Salvage Yard is considered a known MEC area with potentially complete MEC and MC exposure pathways.

Port of Long Beach Mitigation Pond

The POLB Mitigation Pond is one of four tidally influenced wetland ponds created by the POLB in 1989/1990. The POLB Mitigation Pond site is located immediately south of Slough Road and extends roughly 630 feet south into the pond. The POLB Mitigation Pond area was used from 1944 to 1982 in association with the Primer/Salvage Yard. Prior to the pond's creation, the site reportedly was used as an Explosive Ordnance Disposal (EOD) demonstration area and a safety demonstration area at an unknown frequency. EOD detonated 1 pound or less of C4 explosive each time the site was used, and the safety demonstrations consisted of igniting 1 ounce or less of black powder each time to demonstrate to station personnel the explosive properties of the product they were handling (NEESA, 1985). The site is also suspected to have unreported disposal of similar munitions, as reported at the Primer/Salvage Yard (NEESA, 1985). MEC and munitions debris were observed in the bank of the POLB Mitigation Pond during the visual survey. The POLB Mitigation Pond is considered a known MEC area with potentially complete MEC and MC exposure pathways.

Buildings 101-102 Evaporation Ponds

The Buildings 101-102 Evaporation Ponds are located south of Westminster Street at 8th Street. The site is comprised of the four unlined evaporation ponds associated with Buildings 101-102 and 98 that were used to discharge Explosive D (ammonium picrate). The complex operated from 1945 through the mid-1950s, in 1962, and in 1971 for demilitarizing 5-inch projectiles. Wash water with Explosive D was generated during final steam and warm water washout of projectile casings in Building 98. Wash water with Explosive D was discharged to a baffled concrete basin (Installation Restoration Program [IRP] Site 36) on the south side of Building 98 for primary settling. Once through the concrete basins, the wash water drained through a concrete trench to a series of three evaporation ponds, totaling 2.3 acres (IRP Site 2). From 1945 to mid-1971 roughly 45 tons of Explosive D mixed with wash water was drained into IRP Site 2 for evaporation and settling. In addition to wash water generated in Building 98, an additional 520 pounds of wash water with Explosive D was discharged to the east of Building 101-102 into a 50-foot-by-50-foot evaporation pond (IRP Site 3). In addition, Royal Demolition Explosive (RDX) has been found in Buildings 101 and 102 at explosive concentrations, but the evaporation ponds were not sampled for RDX in previous studies. The Building 101-102 Evaporation Ponds are not suspected to contain MEC. However, potentially complete MC exposure pathways are present.

Building 94 Settling Basin

Building 94 (a cartridge case loading and breakdown facility) was commissioned in 1945 and operated until roughly 1981 for loading and breaking down 20-mm, 40-mm, 3-inch, and 5-inch projectiles (NEESA, 1985). The interior of Building 94 (floor, walls, and ceiling) was occasionally washed down with water to prevent smokeless powder dust accumulation, and the wash water drained through floor drains. In 2003, analytical sampling from inside Building 94 reported below hazard threshold concentrations of RDX, High Melting Point Explosive, and picrate in floor drains (NSWC Indian Head, 2003). Based on engineering diagrams, the floor drains drained to a 50-foot-by-50-foot settling basin to the east of Building 94. The period of use of the basin and the amount of MC drained to the basin are unknown. The former settling basin is no longer visible, and its location has been graded and cultivated. The settling basin is not suspected to contain MEC. However, there is a possibility for explosive subsurface soils (i.e., MC concentrations in soil greater than 10%) to be present in the former settling basin below the graded agricultural field. Based on site history, potentially complete explosive soils and MC exposure pathways are present.

Explosives Drop Test Tower

The Explosives Drop Test Tower is located at the southern terminus of 7th Street within the Seal Beach NWR. The Explosives Drop Test Tower was used from 1955 to 1977 in conjunction with former Buildings 435 and 437 (both located 80 feet to the east of the tower), to test experimental propellants. The tower is currently standing and is 50 feet high. Ordnance was dropped from the center of the tower into a 2.5-foot-square by 6-foot-high thick metal box. The bottom of the steel box was reinforced with a belowground 4-inch-thick armor plate block on top of a 3-foot-thick concrete block. The only reported use of the tower was to drop test 1.4 (minor explosion hazard) cartridges for safety testing (Mr. Ball, pers. comm.). The Explosives Drop Test Tower is not suspected to contain MEC. Explosive items would have been used under controlled testing situations and would have been accounted for during use. In addition, no indications of MEC related items were observed during the site visit. However, potentially complete MC exposure pathways are present.

Westminster POLB Fill Area

The Westminster POLB Fill Area along the Westminster Railroad spur is located between Westminster Avenue and Westminster Street. The site is 1.75 miles long by an estimated 715 feet wide (approximately 180 acres). In 1989/1990, the Westminster POLB Fill Area was used to place 3 to 4 feet of fill that was, in part, excavated from the POLB Mitigation Pond, a known MEC site. The Westminster POLB Fill Area is a suspected MEC area based on its site history and interview reports that 3-inch rounds were seen falling off of trucks during the excavation of soil from the POLB Mitigation Pond (Mr. Carlock, Mr. Giorgice, and Mr. Durham, pers. comm.). Based on site history, potentially complete MEC and MC exposure pathways are present.

1.0 INTRODUCTION

The Department of Defense (DoD) has established the Military Munitions Response Program (MMRP) under the Defense Environmental Restoration Program (DERP) to address munitions and explosives of concern (MEC) (including unexploded ordnance [UXO] and discarded military munitions [DMM]) and munitions constituents (MC) at other than operational military ranges and other sites. Closed, transferred, and transferring military ranges and sites not located on an operational range are considered other than operational. This report addresses other than operational ranges and sites at an active installation.

The DoD and the United States (U.S.) Navy (Navy) are currently establishing policy and guidance for munitions response actions under the Navy Munitions Response Program (MRP). However, key program drivers developed to date conclude that munitions response actions will be conducted under the process outlined in the National Contingency Plan (40 Code of Federal Regulations 300), as authorized by the Comprehensive Environmental Response, Compensation, and Liability Act of 1980, 42 United States Code (U.S.C.) 9605, and amended by the Superfund Amendments and Reauthorization Act of 1986 (SARA), Pub. L. 99-499 (hereinafter referred to as Comprehensive Environmental Response, Compensation and Liability Act [CERCLA]). This report represents a Preliminary Site Inspection (PSI) for Naval Weapons Station (NAVWPNSTA) Seal Beach, located in Orange County, California. The DoD, Navy, and U.S. Environmental Protection Agency (USEPA) guidance for conducting and documenting preliminary assessments (PAs) were followed and tailored, where appropriate, to address the unique aspects of MEC and MC.

This PSI report is organized into the following sections:

Section 1 – Introduction

Section 2 – Installation Background

Section 3 – Physical and Environmental Characteristics

Section 4 – Summary of Data Collection Effort

Section 5 – Site Characteristics

The following supporting information is appended to this PSI report:

References (Appendix A)

Project Source Data – General (Appendix B)

Project Source Data – Site-Specific (Appendix C)

Ordnance Technical Data Sheets (Appendix D)

A compact disc (CD) is provided that includes the information contained in both Appendix B and Appendix C.

1.1. Purpose

This PSI summarizes the history of munitions use for the following former sites at NAVWPNSTA Seal Beach: 1) Primer/Salvage Yard, 2) Port of Long Beach (POLB) Mitigation Pond, 3) Buildings 101-102 Evaporation Ponds, 4) Building 94 Settling Basin, 5) Explosives Drop Test Tower (Building 436), and 6) Westminster POLB Fill Area. The PSI provides an assessment of the current conditions with respect to MEC and MC. The PSI provides the necessary information for Navy and regulatory decision-makers to: 1) eliminate from further consideration those MEC sites that pose minimal or no threat to public health or the environment; 2) differentiate MEC sites that may not require further munitions response actions from those that will require further investigation and/or munitions response actions; 3) determine if an imminent explosives safety hazard from MEC is present that warrants an accelerated response action; and 4) determine if an imminent hazard from MC to human health or the environment is present and warrants an accelerated response action.

1.2. Programmatic Framework

The regulatory structure for managing Navy MRP sites is guided by a complex mixture of federal, state, and local laws, as well as DoD and Navy regulations and guidance, and provides the necessary information for Navy decision-makers. The key legislation, policy, and guidance directing the program includes, but is not limited to, the following:

Management Guidance for the Defense Environmental Restoration Program (DERP) - (September 2001)

The DERP Management Guidance establishes an MMRP element for MEC and MC defense sites. The history of DERP dates back to the SARA of 1986[1]. The scope of the DERP is defined in 10 U.S.C. §2701(b), which states that the

> "Goals of the program shall include the following: … (1) The identification, investigation, research and development, and cleanup of contamination from

[1] *SARA was signed into law on October 17, 1986, and amended the CERCLA of 1980, 42 U.S.C. §9601 et seq. Related sections in Title 10 of the U.S.C. (10 U.S.C. §§2702-2710 and §§2810-2811) further define the program.*

> hazardous substances, and pollutants and contaminants. (2) Correction of other environmental damage (such as detection and disposal of unexploded ordnance) which creates an imminent and substantial endangerment to the public health or welfare or to the environment …"

National Defense Authorization Act (Fiscal Year [FY] 02) (Sections 311–312)

Sections 311–312 of the National Defense Authorization Act of FY02 reinforced the DoD's 2001 DERP Management Guidance by tasking the DoD to develop and maintain an inventory of defense sites that are known or suspected to contain MEC and/or MC. Section 311 requires the DoD to develop a protocol for prioritizing defense sites for response activities in consultation with the states and tribes. Section 312 requires the DoD to create a separate program element to ensure that the DoD can identify and track munitions response funding.

The September 2001 Management Guidance for the DERP and the 2002 National Defense Authorization Act, described above, established the MMRP. The DoD provides program guidance and methods for conducting a baseline inventory of defense sites containing, or potentially containing, MEC and/or MC. The Navy baseline inventory of sites was completed in FY02 and was used to establish the sites where further evaluation was needed on the potential for MEC and MC.

1.3. Project Management

This PSI has been coordinated and managed by Naval Facilities Engineering Command (NAVFAC) Atlantic. NAVFAC Atlantic performs engineering functions for Navy installations throughout the United States and is the program manager for this PSI. Malcolm Pirnie, Inc. has been contracted to prepare this PSI. NAVFAC Southwest (NAVFACSW) provides technical guidance and management for environmental projects at NAVWPNSTA Seal Beach. The Navy Remedial Project Manager from NAVFACSW and the installation point of contact for NAVWPNSTA Seal Beach provided valuable information and assistance throughout the PSI data collection process.

1.4. PSI Approach

CERCLA implementing guidance, which was prepared for sites contaminated with hazardous substances, describes the PA as a limited-scope investigation based upon existing and available data. However, the guidance also states that the PA process developed under CERCLA is not equally applicable to all sites and all contaminants and that variation from the guidance may be necessary. Sites containing MEC are prime examples of sites where the generic CERCLA process

is incomplete. Unique explosives safety issues associated with MEC cannot be assessed solely with the parameters developed for chemical and hazardous waste contaminants. While this PSI generally follows CERCLA guidance, certain elements of the report have been tailored to address the unique explosives safety aspects of MEC.

The PSI process for each of the sites involves collecting and reviewing existing and available information about the site. Data collection activities include off-site and on-site research and interviews. The process also includes a visual survey to assess physical evidence that might indicate the presence of MEC (e.g., discarded munitions items, ordnance penetration holes, scarred trees) and MC (e.g., ground scarring, stressed vegetation, chemical residue) at the site. The Malcolm Pirnie data collection team conducted the on-site portion of the data collection and the visual survey for NAVWPNSTA Seal Beach from 14 November 2007 through 16 November 2007.

This PSI is inclusive and makes use of all available data relating to munitions use at NAVWPNSTA Seal Beach, including historical records, field data, anecdotal evidence, interviews with site personnel, and professional knowledge and experience. It is based, in part, on information provided in documents referenced in Appendix A and is subject to the limitations and qualifications presented in the referenced documents.

2.0 INSTALLATION BACKGROUND

The following sections provide general information about NAVWPNSTA Seal Beach, including its location and setting; a brief history of the installation; its missions over time; and a history of munitions related training, storage, and usage.

2.1. Location and Setting

NAVWPNSTA Seal Beach is a 5,000-acre facility located adjacent to the Pacific Ocean in the city of Seal Beach, Orange County, California, approximately 26 miles south of the Los Angeles urban center. The installation location is provided on Map 2.1-1. The U.S. Fish and Wildlife Service manages about 911 acres in the southwest portion of the station as part of Seal Beach National Wildlife Refuge (NWR), which provides habitat for various federally and state listed species (USFWS, 2007). Urban areas surrounding NAVWPNSTA Seal Beach are the cities of Huntington Beach and Westminster to the east and Los Alamitos to the north. The City of Seal Beach is adjacent to the installation to the north, south, and west. Anaheim Bay and the Pacific Ocean are adjacent to the south of the installation.

Map 2.1-1 is a topographic map that shows the general layout of the installation, as well as the locations of the sites discussed in this PSI report.

2.2. Installation History

NAVWPNSTA Seal Beach is one of several weapons stations maintained by the Navy to provide fleet combatants with ready-for-use ordnance. Because of its geographic location, this base serves as a supply point for more than one-half of the operating Navy and Marine Corps forces in the Pacific.

The mission of NAVWPNSTA Seal Beach is to provide shore-based infrastructure support to the Navy's ordnance mission and other fleet and fleet support activities. The installation is used by the Navy to receive, store, and guard large quantities of explosives and ammunition and to distribute and deliver them as needed to other installations. Missiles, torpedoes, countermeasure devices, and conventional ammunition are loaded onto ships at the facility's 1,000-foot-long wharf. Personnel also perform maintenance on some weapons systems. An average of 60 vessels is loaded or unloaded each year (NAVWPNSTA Seal Beach, n.d.).

In 1944, the Eleventh Naval District, under the Bureau of Ordnance, commissioned the naval facility at Seal Beach as the Naval Ammunition and Net Depot (NAND) Seal Beach. In 1962, the NAND was redesignated as a Naval Weapons Station. The original site for the depot consisted of approximately 3,090 acres, but plans to expand and include a classification and segregation yard necessitated the acquisition of 1,717 additional acres. In 1972, the Seal Beach NWR was established on Naval Weapon Station land. In October 1998, the base was redesignated as Naval Weapons Station Seal Beach (NAVFACSW, 2005). With the disestablishment of the Naval Ordnance Center Pacific Division at Seal Beach, the base was designated as the lead Weapons Support Facility, Seal Beach in October 2007.

In the 1940s, NAND Seal Beach was responsible for issuing ammunition; replacing ammunition and ammunition components; and receiving, segregating, and transshipping cargo shipments of light ammunition and explosives. From January 1945 through the conclusion of World War II in August 1945, the depot operated at maximum capacity carrying out these tasks. Due to the rapid demobilization following World War II and the relegation of a large part of the wartime fleet to an inactive status, large quantities of ammunition were shipped to the depot during 1945 and 1946 (NAVFACSW, 2005). Ordnance production and handling facilities constructed and utilized during World War II and the post–World War II era typically processed munitions containing trinitrotoluene (TNT), Royal Demolition Explosive (RDX), tetryl, and ammonium picrate (Explosive D). Gun propellants manufactured for World War II and throughout most of the twentieth century contained the smokeless powders nitrocellulose and nitroglycerin. Post–World War II saw the introduction of composite propellants into Naval processing facilities that typically contained ammonium perchlorate as the energetic constituent (NAVFACSW, 2005).

From 1950 through 1953, during the Korean War, the handling of ammunition accelerated steadily. These operations included demilitarization of large quantities of World War II ammunition in stock. During this time, the depot constructed additional ammunition storage facilities, a static rocket test firing facility, and a fuze and detonator magazine. Between 1958 and 1962, operations at NAND Seal Beach continued to shift from conventional ammunition to guided missiles and related components. This included surface-launched missiles and underwater weapons (NAVFACSW, 2005). This shift of emphasis led to the redesignation of NAND Seal Beach to the Naval Weapons Station Seal Beach in 1962. In 1966, production of surface missile systems continued with the Terrier, Tartar and Talos missiles being produced at Seal Beach. In addition, renovation of conventional ammunition increased during 1966. Between 1966 and 1970,

ordnance production numbers decreased and two reductions-in-force were conducted (NAVFACSW, 2005).

2.3. Munitions Related Training/Storage/Usage

The installation is used by the Navy to receive, segregate, store, and guard large quantities of explosives and ammunition and to distribute and deliver them as needed to other installations. In addition, the installation conducts research, testing, and refurbishing on weapons. Activities related to this mission include the segregation, storage, and suspected undocumented disposal of munitions (e.g., live, inert, and damaged 2.75-inch rockets, 20- to 40-millimeter [mm] projectiles, grenades, black and smokeless powders, primers, fuzes, small arms ammunition). Refurbishing activities include the handling and cleaning of projectile casings with Explosive D and smokeless powder (NEESA, 1985). Research activities included the testing of experimental fuels and explosives for rockets and grenades using test firing blocks and an Explosives Drop Test Tower.

The only closed range on NAVWPNSTA Seal Beach that has had ordnance fired on it is the former skeet range, Installation Restoration Program (IRP) Site 74. Other closed range sites at NAVWPNSTA Seal Beach have been investigated under the IRP. These include open burn / /open detonation areas (IRP Sites 6, 12, and 23), ordnance test evaluation facilities (IRP Sites 1 and 24), and munitions disposal areas (IRP Site 5). The small arms range on the station is presently operational and programmatically excluded from the Navy MRP.

As a result of this PSI, six sites are identified as potentially containing MEC or MC. The sites were chosen based on historical document reviews, engineering diagrams, aerial photographs, and personnel interviews. These sites are:

- Primer/Salvage Yard,
- POLB Mitigation Pond,
- Buildings 101-102 Evaporation Ponds,
- Building 94 Settling Basin,
- Explosives Drop Test Tower (Building 436), and
- Westminster POLB Fill Area.

The sites evaluated in this PSI are briefly summarized below. Map 2.1-1 depicts the locations of the PSI sites on the installation.

Primer/Salvage Yard

The 46-acre Primer/Salvage Yard is located south of Bolsa Avenue, east of 7th Street, west of 9th Street, and north of the northern bank of the 7th Street POLB Mitigation Pond. The northern bank of the 7th Street POLB Mitigation Pond marks its southern boundary. The Primer/Salvage Yard and associated storage were used from 1944 through the late 1990s in conjunction with rocket segregation, inspection, and repackaging; bomb and rocket overhaul (e.g., 2.75- and 7.2-inch); and projectile (e.g., 20- to 40-mm) segregation, inspection, and repackaging. It is also reported that thousands of projector casings and damaged ammunition were stored in the Primer/Salvage Yard area (NEESA, 1985). During the site visit, potential MEC and munitions related items were noted inside the fenced yard.

Port of Long Beach Mitigation Pond

The POLB Mitigation Pond is one of four tidally influenced wetland ponds created by the POLB in 1989/1990. The POLB Mitigation Pond site is located immediately south of Slough Road and extends roughly 630 feet south into the pond. The POLB Mitigation Pond area was used from 1944 to 1982 in conjunction with the Primer/Salvage Yard. Prior to the pond's creation, the site was reportedly used as an explosive ordnance disposal (EOD) demonstration area and a safety demonstration area at an unknown frequency. EOD detonated 1 pound or less of C4 explosive each time the site was used, and the safety demonstrations consisted of igniting 1 ounce or less of black powder each time to demonstrate to station personnel the explosive properties of the product they were handling (NEESA, 1985). The site is also suspected to have unreported disposal of munitions similar to those reported at the Primer/Salvage Yard (NEESA, 1985). Munitions were observed in the bank of the POLB Mitigation Pond during the visual survey.

Buildings 101-102 Evaporation Ponds

The Buildings 101-102 Evaporation Ponds are located south of Westminster Street at 8th Street. The site is comprised of the four unlined evaporation ponds associated with Buildings 101-102 and 98. The complex operated from 1945 through the mid-1950s, in 1962, and in 1971 for demilitarizing 5-inch projectiles. Wash water with ammonium picrate (Explosive D) was generated during final steam and warm water washout of projectile casings in Building 98. Wash water with Explosive D was discharged to a baffled concrete basin (IRP Site 36) on the south side of Building 98 for primary settling. Once through the concrete basins, the wash water drained through a concrete trench to a series of three evaporation ponds, totaling 2.3 acres (IRP Site 2). From 1945 to mid-1971, roughly 45 tons of Explosive D mixed with wash water was drained into the IRP Site 2 ponds for evaporation and settling. In addition to wash water generated in Building

98, an additional 520 pounds of wash water with Explosive D was discharged to the east of Building 101-102 into a 50-foot-by-50-foot evaporation pond (IRP Site 3).

Building 94 Settling Basin

Building 94 (a cartridge case loading and breakdown facility) was commissioned in 1945 and operated until roughly 1981 for the loading and break down of 20-mm, 40-mm, 3-inch, and 5-inch projectiles (NEESA, 1985). The interior of Building 94 (floor, walls, and ceiling) was occasionally washed down with water to prevent smokeless powder dust accumulation, and the wash water drained through floor drains. In 2003, analytical sampling from inside Building 94 reported below hazard threshold concentrations of RDX, High Melting Point explosive (HMX), and picrate in floor drains (NSWC Indian Head, 2003). Based on engineering diagrams, the floor drains drained to a 50-foot-by-50-foot settling basin to the east of Building 94. The period of use of the basin and the amount of MC drained to the basin are unknown. The former settling basin is no longer visible, and its location is currently graded. The site was used for agricultural out leases until fall 2008.

Explosives Drop Test Tower (Building 436)

The Explosives Drop Test Tower is located at the southern terminus of 7th Street within the Seal Beach NWR. The Explosives Drop Test Tower was used from 1955 to 1977, in conjunction with former Buildings 435 and 437 (both located 80 feet to the east) to test experimental propellants. The tower is currently standing and is 50 feet high. Ordnance was dropped from the center of the tower into a 2.5-foot-square by 6-foot-high thick metal box. The bottom of the steel box was reinforced with a belowground 4-inch-thick armor plate block on top of a 3-foot-thick concrete block. The only reported use of the tower was to safety test 1.4 (minor explosion hazard) cartridges (Mr. Ball, pers. comm.).

Westminster POLB Fill Area

The Westminster POLB Fill Area along the Westminster Railroad spur is located between Westminster Avenue and Westminster Street. The site is 1.75 miles long by an estimated 715 feet wide (approximately 180 acres). In 1989/1990, the Westminster POLB Fill Area was used to place 3 to 4 feet of fill that was, in part, excavated from the POLB Mitigation Pond, a known MEC area (Section 5.2). The Westminster POLB Fill Area is a suspected MEC area based on its site history and interview reports that 3-inch rounds were seen falling off of trucks during the excavation of soil from the POLB Mitigation Pond (Mr. Carlock, Mr. Giorgice, and Mr. Durham, pers. comm.).

This page intentionally is blank.

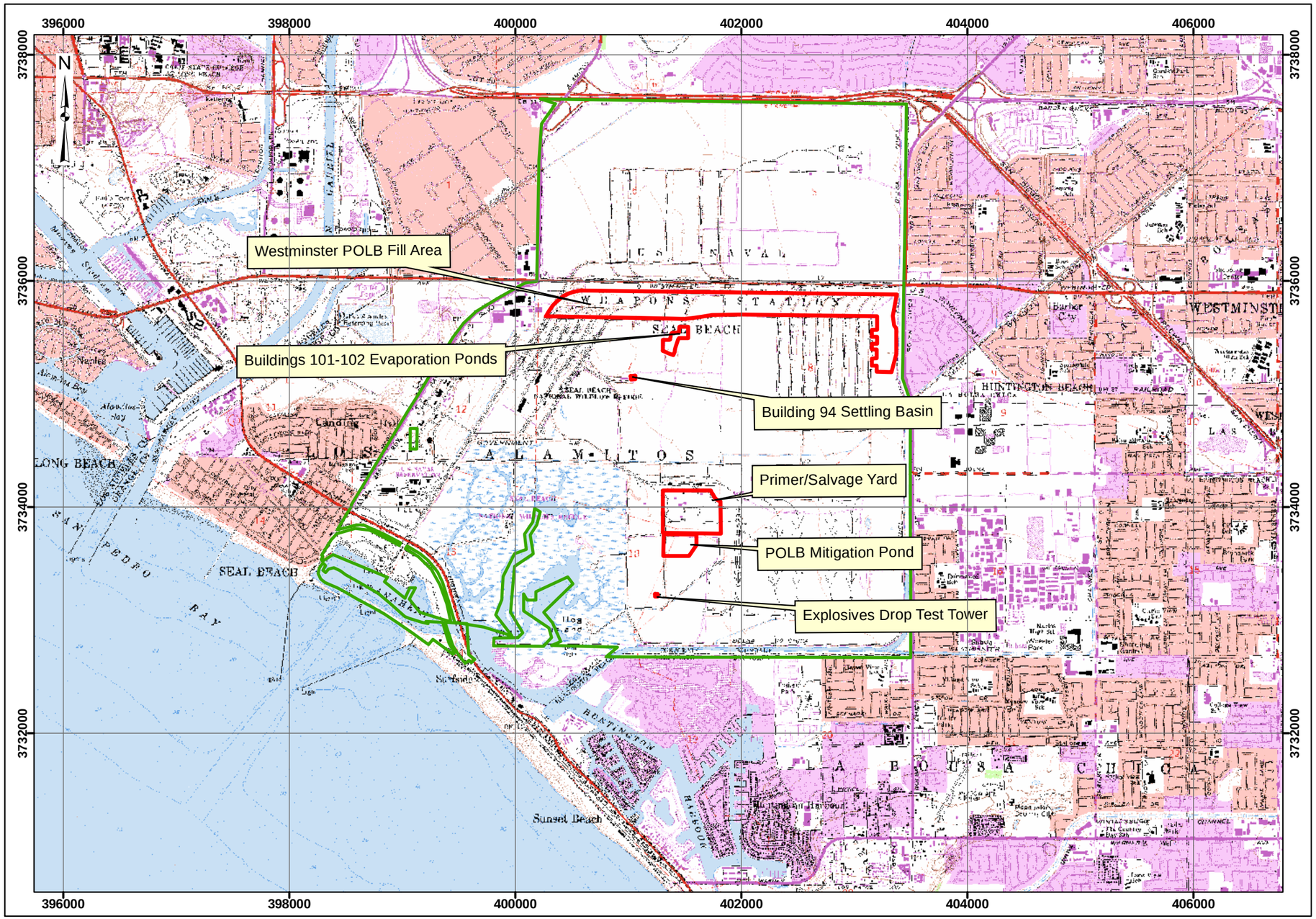

Draft Final Preliminary Site Inspection
NAVWPNSTA Seal Beach, California

MALCOLM PIRNIE

Map 2.1-1
Area Location Map

Legend

Installation Boundary

MRP Sites

0 250 500 1,000
Meters

Data Source: NAVWPNSTA Seal Beach, GIS Data, 2007
USGS, 7.5 Minute Series Topographic Survey, Terraserver 2007

Coordinate System: UTM, Zone 11N
Datum: NAD 83
Units: meters

Contract: N62472-02-D-1300
Edition: Draft Final Preliminary Site Inspection
Date: December 2008

This page intentionally is blank.

3.0 PHYSICAL AND ENVIRONMENTAL CHARACTERISTICS

The following sections provide general information for NAVWPNSTA Seal Beach, including its climate, topography, geology, soil and vegetation types, hydrology, hydrogeology, cultural and natural resources, and endangered species.

3.1. Climate

The climate at NAVWPNSTA Seal Beach is typical of the maritime subclimate within the prevailing California Mediterranean climate: mild winters, cool summers, high relative humidity, and frequent early morning clouds that lead to afternoon sunshine. The annual average temperature is 74 degrees Fahrenheit (°F). Summer average high temperatures range from 77°F to 84°F and average lows range from 60°F to 65°F. Winters tend to be moderate, with highs typically 67°F and average lows ranging from 45°F to 47°F. Yearly precipitation averages 13 inches per year; February is the wettest month, averaging 3 inches per year, and July is the driest, averaging 0.02 inches per year (WRCC, n.d.). Periodically, the region will experience *El Niño* conditions, which tend to bring wetter winters to the area through heavy storms. The prevailing winds are westerly with an average velocity of 10 knots; occasionally, strong dry northeasterly winds descend the mountain slopes in the fall, winter, and early spring months (NAVFACSW, 1979). The strongest winds that occur in the region are associated with the winter and spring storms off the Pacific Ocean (NAVFACSW, 2005).

3.2. Topography

NAVWPNSTA Seal Beach is located on flat alluvial deposits that slope southwest from approximately 20 feet above sea level (asl) to sea level at the Seal Beach NWR. The highest topographic feature on the installation is the Landing Hill (50 feet asl). Landing Hill is an uplift on the southwest side of the facility along the Newport-Inglewood fault that extends west of NAVWPNSTA Seal Beach across Seal Beach Boulevard (NEESA, 1985).

3.3. Geology

Bedrock in the area is a thick sequence of Tertiary and Quaternary sedimentary rocks deposited on a basement of pre-Tertiary metamorphic and crystalline rocks. Tertiary rocks range in age from Oligocene to Pliocene and include sandstone, siltstone, shale, and mudstone and are almost exclusively of marine origin (NAVFACSW, 2005). The Newport-Inglewood fault zone parallels the coastline and generally forms a barrier to groundwater flow. Erosion channels filled with

permeable alluvium break this barrier at the Alamitos Gaps (Department of Water Resources, 2003). Table 3.3-1 provides a summary of the geologic formations present at NAVWPNSTA Seal Beach (C.T. Higgins et al., 1984; NAVFACSW, 2005)

Table 3.3-1: Summary of NAVWPNSTA Seal Beach Formations

Geologic Age (name)		Formation Name	Aquifer
Holocene	--	Recent alluvium	Perched to semiconfined water
Pleistocene	Upper	Lakewood	Exposition-Artesia, Gage
	Lower	San Pedro	Lynwood, Silverado, Sunnyside
Pliocene	Upper	Pico	Sunnyside
	Lower	Repetto	No freshwater aquifer
Miocene	Upper	Puente	No freshwater aquifer
	Middle	Topanga	No freshwater aquifer
Jurassic to Cretaceous	--	Schist and granitic basement	No freshwater aquifer

3.4. Soil and Vegetation Types

Soils at NAVWPNSTA Seal Beach are characterized predominantly by layers of silt to silty-clay that are permeable, although poorly drained (NEESA, 1985). There are two soil types on either side of the Newport-Inglewood fault trace. Very dense fine sands characterize the soil strata on the south side of the fault, while the area to the north of the fault consists of layers of clay, silt, and sand. Runoff on the station is slow over bare level soil, and the erosion hazard is slight. Soils on the installation are typically moderately alkaline and calcareous to a depth of about 49 inches (NEESA, 1985).

Protected within the southern portion of NAVWPNSTA Seal Beach is the Seal Beach NWR, one of the largest remaining salt marshes along the Southern California coast. About 740 acres of the 911-acre Seal Beach NWR are subject to unobstructed tidal influence; this includes 565 acres of salt marsh vegetation, 60 acres of intertidal mudflats, and 115 acres of tidal channels and open water. The coastal salt marsh habitat is typically dominated by cordgrass (*Spartina foliosa*) and pickleweed (*Salicornia spp*.), although the POLB mitigation ponds have become an increasingly important eelgrass habitat.

Agricultural out-leases totaling 2,171 acres consist of about 1,385 acres of irrigable farm area, 760 acres of dry land farm area, and 26 acres of maintenance and storage area (NAVFACSW, 2002). Agricultural crops consist of barley, lima beans, garbanzo beans, nopales, cucumber, cauliflower, green beans, celery, lettuce, squash, peppers, watermelon, strawberries, and cabbage. Irrigated crops are watered using station wells with water applied by sprinkler or furrow. There are few shrubs on the installation, and they typically are focused in riparian woodlands of southern willow scrub trees (*Salix spp.*). Undeveloped land on the installation is often characterized by pickleweed *(Salicornia spp*.) and non-native annual grasses that are low and can be sparse in cover. Non-native grasses are dominated by several species of the genus *Bromus*, along with *Avena spp*., *Vulpia myuros* (NAVWPNSTA Seal Beach, 2007).

3.5. Hydrology

Surface water drainage at NAVWPNSTA Seal Beach is provided by ditches and tidal sloughs through flat-lying clay deposits. Streamflow in ditches is intermittent and dependent on rainfall and irrigation runoff. Most surface water at NAVWPNSTA is confined in the tidal flats and wetland marshes within the Seal Beach NWR. Generally, tidal areas are wet or damp, except during extended dry periods. During high tides, water floods the tidal flats, although the extent of tidal flooding within the Seal Beach NWR is controlled by raised roadbeds that serve as barriers. Three major tidal subchannels branch northward from the main channel leading from Anaheim Bay. The west branch supplies water to areas west of Oil Island (connected to the Pacific Coast Highway and roughly located in the southern center of the Seal Beach NWR) and to the northern part of the Seal Beach NWR. The middle branch supplies water to Oil Island and the area north to Bolsa Avenue. The east branch supplies water to the largest tidal flat and the southeast portion of the Seal Beach NWR. Water is present perennially in the lower reaches of the major sloughs closer to the mouth of the bay (NAVFACSW, 2002).

3.6. Hydrogeology

Groundwater hydrology information pertaining to NAVWPNSTA Seal Beach obtained from previous investigations and a regional groundwater contour study by the Orange County Water District show that groundwater flow direction at the station is influenced by groundwater extraction and, in the vicinity of the Los Alamitos injection barrier, by groundwater injection. The installation is located in the southwest corner of the Orange County Basin, overlying important confined alluvial groundwater supply aquifers of sand, gravel, and clay deposits of Pleistocene to Pliocene age (Table 3.3-1). Fresh groundwater containing less than 50 parts per

million chloride is found in aquifers east of the Newport-Inglewood fault. West of the fault, groundwater is predominantly brackish to saline. In general, groundwater flows away from the Seal Beach NWR to the northeast; however, the direction may vary seasonally (NEESA, 1985; NAVFACSW, 2002).

The upper aquifers (75 to 200 feet deep) are no longer used for water supply. The primary freshwater groundwater aquifers at NAVWPNSTA Seal Beach are at a depth of 600 to 1,000 feet below ground surface (bgs) and are confined by a 100- to 200-foot-thick clay layer. The aquifer lies entirely inland from the Newport Inglewood fault with recharge primarily from rainfall in the up gradient areas. Groundwater migration from NAVWPNSTA Seal Beach to the lower aquifers is unlikely due to the thick clay layer separating the deeper aquifers from the shallow semiperched aquifer (NAVWPNSTA Seal Beach, 1992).

The confined aquifers are artesian and historically supplied potable water to NAVWPNSTA Seal Beach and surrounding communities. Currently, groundwater on NAVWPNSTA Seal Beach is used only for agricultural irrigation. Three production wells are reported on NAVWPNSTA Seal Beach. They are located to the east of the Primer/Salvage Yard, to the west of Westminster POLB Fill Area, and in the northeast corner of the northern half of NAVWPNSTA Seal Beach (NAVFACSW, 1998a; NAVFACSW, 2002; NAVWPNSTA Seal Beach, 2007).

Lateral groundwater movement in the moderately permeable shallow aquifer is estimated to be several hundred feet per year (NEESA, 1985). The hydraulic conductivity of the shallow aquifer is estimated to be 450 feet per day, and the maximum hydraulic gradient on the station is about 7.5 feet per mile, or 0.0014. The porosity of sand and gravel ranges from 0.25 to 0.5 with an effective porosity of 0.3. Given these parameters, the calculated velocity for groundwater in the shallow aquifer beneath the station is estimated at 2.1 feet per day or approximately 770 feet per year (NEESA, 1985).

3.7. Cultural and Natural Resources

There are no cultural resources identified within or adjacent to the boundaries of the six sites identified in this PSI. Within NAVWPNSTA Seal Beach, cultural resource features have been identified, including prehistoric archeological sites and World War II and Apollo space program era historic buildings (NAVFACSW, 2002; COUP Incorporated, n.d.).

Protected within the station boundaries is the Seal Beach NWR, one of the largest remaining salt marshes along the Southern California coast. About 740 acres of the 911-acre Seal Beach NWR are subject to unobstructed tidal influence, including 565 acres of salt marsh vegetation, 60 acres of intertidal mudflats, and 115 acres of tidal channels and open water. Since its establishment in 1974, Seal Beach NWR's principal focus has been on protecting federally listed species and coastal wetlands used for foraging and resting by migratory waterfowl, shorebirds, and raptors that travel along the Pacific Flyway (USFWS, 2007). The Seal Beach NWR supports federally and state listed sensitive, threatened, and endangered species, as presented in Section 3.8 (NAVWPNSTA Seal Beach, 2007).

Several significant producing oil fields lie in the vicinity of the installation, including the Seal Beach oil field that extends into the western portion of the installation.

3.8. Endangered and Special Status Species

Federally listed species have been documented at NAVWPNSTA Seal Beach, and many other sensitive species (including California Department of Fish & Game [CDFG] state-listed species, California Native Plant Species [CNPS] rare species, and federal species of special concern) inhabit the installation, particularly within the Seal Beach NWR. The protection of state-listed rare and endangered species on Navy land is not required by legal mandate; however, state-listed species must be considered during the National Environmental Protection Act (NEPA) and California Environmental Quality Act (CEQA) processes. Consideration of plant species on the CNPS List 1B in environmental documents related to CEQA is also required. Protected species known or suspected to have the potential to inhabit NAVWPNSTA Seal Beach are listed in Table 3.8-1 (NAVWPNSTA Seal Beach, 2007; CDFG, 2007).

Table 3.8-1: Summary of Protected Species on NAVWPNSTA Seal Beach

Ecological Receptors	Species
Federal endangered	<u>Animals</u> • California brown pelican (*Pelecanus occidentalis californicus*) is a migratory bird, although it is potentially present year-round at NAVWPNSTA Seal Beach. Brown pelicans roost primarily on tire dikes and other artificial structures, seldom roosting on natural structures. Brown pelicans use the outer harbor, nearshore water, and rock jetties of the installation more often than the Seal Beach NWR. They are most abundant at the Seal Beach NWR in late summer and fall. They fish the open water or roost on mud flats,

Table 3.8-1: Summary of Protected Species on NAVWPNSTA Seal Beach	
Ecological Receptors	Species
	fence posts, or in the marsh. The highest count of brown pelicans at the Seal Beach NWR and adjacent waters was 112 individuals observed in September 1970. • California least tern (*Sterna antillarum browni*) is a seabird approximately 9 inches in length with a gray and white body, black-tipped wings, and a black cap. Open sandy or gravelly shores with light-colored substrates, little vegetation, and nearby fishing waters are typical nesting sites. Most initial nesting attempts are completed by mid-June. A second wave of nesting often occurs from mid-June to early August. One migrant species has been documented on NAVWPNSTA Seal Beach during the spring and summer for breeding. • Light-footed clapper rail (*Rallus longirostris levipes*) was listed as a federally endangered species in 1970. The California clapper rail (*Rallus longirostris levipes*) measures approximately 13 to 19 inches from bill to tail and has a hen-like appearance. This species can be found in salt and brackish marshes and tidal sloughs. <u>Plants</u> • Salt marsh bird's beak (*Cordylanthus maritimus ssp. maritimus*) is an annual plant that grows in the salt marshes, just above the high tide line. The salt marsh bird's beak has not been confirmed in recent years at NAVWPNSTA Seal Beach and potentially has been extirpated.
Federal threatened	<u>Animals</u> • Western snowy plover (*Charadrius alexandrinus nivosus*) nests in colonies on sandy beaches and mudflats, which are also used for foraging. Adults and chicks feed on terrestrial and aquatic invertebrates, such as amphipods, sand hoppers, and flies. Though data are unavailable for the 2006 fledging season, the western snowy plover has used the beach areas outside the Seal Beach NWR for nesting and foraging. This species and suitable nesting habitat are uncommon on the Seal Beach NWR, but they are represented. Currently, the western snowy plover has not been observed breeding on Navy property, and only a handful of wintering birds are observed annually.
California fully protected	<u>Animals</u> • The Golden eagle (*Aquila chrysaetos canadensis*) nests and breeds in open habitats and prefers mountainous or hilly areas. The golden eagle is rare at NAVWPNSTA Seal Beach and occasionally is

Table 3.8-1: Summary of Protected Species on NAVWPNSTA Seal Beach	
Ecological Receptors	Species
	drawn to open ground for hunting and the large concentration of potential mammalian and avian prey. It is not expected to be present at the station during the breeding season due to the lack of suitable breeding sites nearby.
State endangered	Animals • Belding's savannah sparrow (*Passerculus sandwichensis beldingi*) is a nonmigratory bird endemic to coastal salt marshes in Southern California. The Belding's savannah sparrow nests in the marsh or pickleweed, but forages in adjacent uplands for grasses and seeds. They feed primarily on invertebrates. The breeding cycle may begin with territory selection and defense in December and may continue through the late summer. Belding's savannah sparrow is a resident bird in the Seal Beach NWR. • California brown pelican (*Pelecanus occidentalis californicus*); see description above. • California least tern (*Sterna antillarum browni*); see description above. • Light-footed clapper rail (*Rallus longirostris levipes*); see description above.
State threatened	Animals • Swainson's hawk (*Buteo swainsoni*) is a medium-sized, transient hawk that breeds in the Seal Beach NWR or in cottonwoods or sycamores of heights ranging from 35 to 75 feet. Swainson's hawks require large, open grasslands with abundant prey in association with suitable nest trees. The croplands on NAVWPNSTA Seal Beach represent potential hunting grounds for this species. Swainson's hawks have been observed on the station during the breeding season; however, breeding pairs have never been observed at the station. Individuals are most likely transient, migrating to larger riparian habitats.
CDFG species of concern	Animals • American white pelican (*Pelecanus erythrorhynchos*) • Black skimmer (*Rynchops niger*) • Black tern (*Chlidonias niger*) • Burrowing owl (*Athene cunicularia*) • California gull (*Larus californicus*) • Common loon (*Gavia immer)* • Cooper's hawk (*Accipiter cooperii*) • Double-crested cormorant (*Phalacrocorax auritus*)

Table 3.8-1: Summary of Protected Species on NAVWPNSTA Seal Beach	
Ecological Receptors	Species
	• Elegant tern (*Thalasseus elegans*) • Ferruginous hawk (*Buteo regalis*) • Large-billed savannah sparrow (*Passerculus sandwichensis rostratus*) • Loggerhead shrike (*Lanius ludovicianus*) • Long-billed curlew (*Numenius americanus*) • Merlin (*Falco columbarius*) • Mountain plover (*Charadrius montanus*) • Northern harrier (*Circus cyaneus*) • Osprey (*Pandion haliaetus*) • Prairie falcon (*Falco mexicanus*) • San Diego black-tailed jackrabbit (*Lepus californicus bennettii*) • San Diego horned lizard (*Phrynosoma coronatum blainvillii population*) • Sharp-shinned hawk (*Accipiter striatus*) • Short-eared owl (*Asio flammeus*) • Tricolored blackbird (*Agelaius tricolor*) • Western snowy plover (*Charadrius alexandrinus nivosus*) • White-faced ibis (*Plegadis chihi*) • Yellow warbler (*Dendroica petechia brewsteri*)
Other ecological receptors	Invertebrates populating estuarine habitats of NAVWPNSTA Seal Beach include species of polychaetes, sea stars, sand dollars, nudibranchs, crustaceans (especially penaeid and palamonid shrimps, portunid crabs), bivalves, and gastropods. Surveys of the salt marsh and outer bay areas have recorded 152 species of invertebrates. At least six species of fish spawn in Anaheim Bay or the adjacent marsh, and the federally endangered tidewater goby (*Eucyclogobius newberryi*) has potential to occur in Anaheim Bay (CA Coastal Conservancy, 2001). The upland portions of the station provide habitat for small mammals, such as rabbits and rodents, although some extend their foraging into the upper reaches of the salt marsh. Common species include the Botta pocket gopher (*Thomomys bottae*), black-tailed jack rabbit (*Lepus californicus*), brush rabbit (*Sylvilagus bachmani*), Audubon's cottontail (*Sylvilagus audubonii*), California meadow mouse (*Microtus californicus*), house mouse (*Mus musculus*), western harvest mouse (*Reithrodontomys megalotis*), and beechey ground squirrel (*Spermophilus beecheyi*). Predators identified at NAVWPNSTA Seal Beach are the Virginia opossum (*Didelphis virginiana*), long-tailed

Table 3.8-1: Summary of Protected Species on NAVWPNSTA Seal Beach	
Ecological Receptors	Species
	weasel (*Mustela frenatd*) and the striped skunk (*Mephitis mephitis*). Four species of reptiles occur on the station: the western fence lizard (*Scheloperus occidentalis*), the side-blotched lizard (*Uta stansburiana*), the southem alligator lizard (*Gerrhonotus multicarinatus*), and the gopher snake (*Pituophis melanoleucus*). Nineteen species of raptors are known to occur on NAVWPNSTA Seal Beach, nine of which nest on the station: red-tailed hawk (*Buteo jamaicensis*), Swainson's hawk (*Buteo swainsoni*), great-horned owl (*Bubo virginianus*), burrowing owl (*Athene cunicularia*), loggerhead shrike (*Lanius ludovicianus*), American kestrel (*Falco sparverius*), great blue heron (*Ardea herodias*), common raven (*Corvus corax*), and American crow (*Corvus brachyrhynchos*). The avian wildlife using the site forages over a large area and would spend relatively little time on site (NAVFACSW, 2005; NAVWPNSTA Seal Beach, 2007).

This page intentionally is blank.

4.0 SUMMARY OF DATA COLLECTION EFFORT

Five primary sources of information were researched as part of the data collection effort for this PSI:

- Historical archives
- Personal communications
- Installation data repositories
- Visual survey observations
- Off-site data sources and repositories, such as local libraries and museums

These five sources of data are discussed below, along with their relative application to this PSI.

4.1. Historical Archive Repositories (Off-Site)

The data collection team reviewed archival records located at the National Archives in College Park, Maryland, and in Washington, DC. The data collection team researched the following records and record groups (RG) for documents relating to munitions usage at NAVWPNSTA Seal Beach. An asterisk (*) indicates the material was photocopied.

Textual Records:
RG 71, Bureau of Yards and Docks
Naval Property Case Files, Boxes 54, 91-96, 100, 101*, 102*, 103*, and 104

RG 72, Bureau of Aeronautics
Entry 67, Confidential Correspondence, 1922-1944, Box 1209
Entry 62-B, General Correspondence, 1943-1945, Box 3475
Entry 1001-C, Unclassified General Correspondence, 1951, Box 203
Entry 1001-E, Unclassified General Correspondence, 1953, Box 281
Entry 1001-G, Unclassified General Correspondence, 1955, Boxes 203 and 227
Entry 1001-H, Unclassified General Correspondence, 1956, Boxes 192 and 215
Entry 1001-I, Unclassified General Correspondence, 1957, Boxes 198 and 219
Entry 1001-J, Unclassified General Correspondence, 1958, Boxes 153 and 169
Entry 1001-K, Unclassified General Correspondence, 1959, Boxes 143 and 157

RG 74, Bureau of Ordnance
Entry 25-I, General Correspondence, 1942, Confidential, Box 217
Entry 25-J, General Correspondence, 1942, Restricted, Box 595*
Entry 25-M, General Correspondence, 1943, Confidential, Box 409
Entry 25-O, General Correspondence, 1943, Restricted, Box 703
Entry 25-U, General Correspondence, 1944, Confidential, Box 597*
Entry 25-V, General Correspondence, 1944, Restricted, Box 1276*
Entry 1001, General Correspondence, 1907-1949, Box 71*

Entry 1003 A-B, General Correspondence, 1948-1959, 1948: Boxes 219, 220*, 221*; and 1949: Boxes 656* and 657*
Entry 1003-A, Office of Administration, General Subject Files, 1945: Box 18*; 1946: Box 4
Construction and Procurement Subject Files
1945, Boxes 1572*, 1573*, 1574*, and 1575*
1946, Boxes 398*, 399*, 400*, 401*, and 402*
1947, Boxes 301, 302*, 303*, and 304

RG 77, Chief of Engineers
Entry 1011, Security-Classified Subject Files, 1940-45, Box 719

RG 334, Interservice Agencies, Armed Forces Explosives Board
Entry 15, Explosion Reports, 1939-48, Boxes 9*, 10*, and 18*

RG 291, Federal Property Resources Service
Entry 1, Real Property Case Files, 1963-67, Boxes 29 and 59
Entry 3 (undated-WW), Real Property Disposal Case Files, Acc. 69A-6900, Box 3
Entry 5, Real Property Disposal Case Files, Acc. 62A-2712, Box 22

RG 429, Organizations in Executive Office of President
Entry 12, Central Real Property Surveys, Box 82*
Entry 17 (undated), Property and Installation Surveys, Box 5*

Cartographic Records:
RG 23, Coast and Geodetic Survey
Charts: 626, 5526
T-charts: T-1803, T-4023
Hydrographic charts: H-1780, 2025, 2990, 3656, 4282, 4284, 6525, and 7786

RG 71, Bureau of Yards and Docks
Maps for facilities 1210* and 1254*
Series II microfilm, Reels 922, 923, and 1466

RG 77, Dept. of Army
Army Mapping Service, AMS-V895 (1560)*

RG 385, Naval Facilities Engineering Command, 1917-1989
Architectural and Engineering Plans, Boxes 596 to 600
Restricted UIC Architectural and Engineering Plans, Boxes 27 and 28

Aerial Photographs:
RG 145, ASCS
Can 1159*
Cans ON 35047* and 35048*

RG 373, Defense Intelligence Agency
Cans ON 108*, 2977*, 3001*, 3002*, 3021, 4379*, 4385*, 4650*, 4682, 4939*, 4942, and 9323*

Still Photos:
RG 80, Dept. of Navy
80-G, Boxes 39*, 66*, 82*, 102*, 149*, 162*, 332*, 641*, 722*, and 749*

4.2. Personal Communications

The data collection team met with personnel from the following offices located at NAVWPNSTA Seal Beach to gather information and/or research records related to munitions use, processing, and handling that was conducted at the station:

- Environmental Department
- Explosive Safety Office
- Ordnance Production and Control
- Planning Department
- Public Works and Engineering Records

A list of the personnel interviewed is presented below.

Mr. Clarence Axtman (Public Works)
Mr. Dennis Carlock (Material Handler)
Mr. Rick Danner (Production Control)
Mr. Edward Durham (Ordnance)
Mr. John Giorgice (Ordnance)
Mr. Paul Pudenz (Former Explosives Safety Officer)
Mr. Bob Schallmann (Natural Resources Biologist)
Ms. Cindernella Smith (Production Control)
Ms. Pei-Fen Tamashiro (IRP / MRP Coordinator)
Mr. David Ball (Supervisor – General Engineer)

The general information obtained from each office during the interviews is summarized below:

Environmental Department – The data collection team interviewed Ms. Pei-Fen Tamashiro, the IRP/MRP Coordinator for NAVWPNSTA Seal Beach. Ms. Tamashiro has worked at NAVWPNSTA Seal Beach since 1998. She assisted the data collection team in coordinating the interviews and the visual surveys, providing access to documents and maps, and was a valuable source of information on previous environmental work at the station. In addition, Mr. Bob Schallmann provided information on natural resources.

Explosives Safety Office - The data collection team interviewed Mr. Paul Pudenz, who has been working at NAVWPNSTA Seal Beach since 1967. He was formerly a medic at the station and is

now working as a contractor to the Navy in Explosives Safety. Mr. Pudenz has had access to many areas at the installation and responded to minor munitions related incidents.

Ordnance Production and Control - The data collection team interviewed Mr. Dennis Carlock, Mr. Rick Danner, Mr. Edward Durham, Mr. John Giorgice, and Ms. Cindernella Smith. They have all worked at NAVWPNSTA Seal Beach since the early to mid-1980s. They provided information on the processing, movement, and destruction of munitions at the station.

Public Works and Engineering Records – The data collection team interviewed Mr. Clarence Axtman. Mr. Axtman has been at the station since 1986; he provided information on the processing of munitions at NAVWPNSTA Seal Beach, especially at the Primer/Salvage Yard.

4.3. On-Site Data Repositories

The data collection team reviewed reports, files, and drawings located in the Engineering Records, Ordnance Department Records, and Environmental Records at NAVWPNSTA Seal Beach. The team made copies of reports and files from the Environmental Records that included IRP investigation reports. The team also searched the NAVWPNSTA Seal Beach Map Vault and made copies of historical engineering diagrams.

4.4. Visual Survey

The data collection team conducted a visual survey of each site as part of the data collection effort for the PSI. The purpose of the visual survey was to identify MEC and ordnance related materials (e.g., expended rounds, fragmentation, MEC debris), evidence of MC (e.g., ground scarring, stressed vegetation, chemical residue), and/or surface features (e.g., storage yards, settling ponds, buildings) that could provide additional information to aid in the characterization of the site. The visual survey was also used to enhance, augment, or confirm the archival data and, in some cases, provide new data to the team. A description of the areas visually surveyed and the results of the visual survey are provided in Section 5.

To the extent possible, visual surveys were conducted by walking the entirety of the area: walking the perimeter of the sites and then walking several transects across the sites while looking for topographical abnormalities, scarred terrain, and stressed vegetation that may indicate ordnance activity or disposal. For sites where this was not feasible due to vegetation or terrain, the team visually surveyed the sites by walking transects across the portions of the site that were most

likely used for ordnance and disposal activities. In general, the terrain at NAVWPNSTA Seal Beach was flat with low vegetation and easy site access.

The Primer/Salvage Yard was 100% visually surveyed, with the exception of a dense row of bushes along the northern boundary. The entire perimeter of the POLB Mitigation Pond was walked, and the banks and shallow portions of water were visually surveyed. The Buildings 101-102 Evaporation Ponds and the entire building complex perimeters were visually surveyed. Vegetation growing in the IRP Site 2 ponds was too dense to allow entry. The Building 94 Settling Basin and the Explosives Drop Test Tower (Building 436) were 100% visually surveyed. Approximately 20% of the western portion of the Westminster POLB Fill Area was walked.

4.5. Off-Site Data Sources

The data collection team searched the aerial photograph libraries of Continental Aerial Surveys, Inc., in Los Alamitos, California; the Fairchild Aerial Photography Collection at Whittier College, Whittier, California; and the University of California Santa Barbara Map and Imagery Library, Santa Barbara, California. Features of interest at NAVWPNSTA Seal Beach that were noted during the data collection and site investigation were visually reviewed. The aerial photographs spanned the years 1938 to 1989 and provided valuable information on past structures and activities at NAVWPNSTA Seal Beach. Copies of the following aerial photographs were obtained.

Aerial Photographs and Maps:

Flight ID AXK-1938, Frame AXK-29-22. Scale 1:20,000. 1938.
Flight ID C-11351, Frame 7-11. Scale 1:24,000. 1947.
Flight ID AXK-1953, Frame IK-15. Scale 1:20,000. 1952.
Flight ID C-22555, Frames 29-40, 29-42, 30-41. Scale 1:14,000. 1956.
Flight ID C-23023, Frame 1-41. Scale 1:36,000. 1958.
Flight ID C-23870, Frames 471, 547. Scale 1:14,000. 1960.
Flight ID PAI-LA-BASIN, Frame 1933-01-11. Scale 1:36,000. 1965.
Flight ID TG-2400, Frame 2-92. Scale 1:28,000. 1968.
Flight ID AMI-OC-70, Frame 5164. Scale 1:36,000. 1970.
Flight ID TG-7400, Frame 12-34. Scale 1:24,000. 1974.
Flight ID TG-7700, Frame 11-16. Scale 1:24,000. 1977.
Flight ID AMI-OC-83, Frame 11601. Scale 1:36,000. 1983.
Flight ID AMI-OC-89, Frame 12386. Scale 1:36.000. 1989.

The *Long Beach Press Telegram*, the Long Beach Public Library, and the Seal Beach Public Library were also contacted for information related to NAVWPNSTA Seal Beach. The only information obtained was a *Long Beach Press Telegram* article reporting a 1946 fire and explosion that occurred when a carload of powder was being unloaded from an unspecified location.

5.0 SITE CHARACTERISTICS

The following sections provide site-specific information about the six sites located at NAVWPNSTA Seal Beach that are the focus of this PSI report, including history and site description, land use, access controls and restrictions, visual survey observations and results, contaminant migration routes, and potential receptors.

5.1. Primer/Salvage Yard

The Primer/Salvage Yard is located north of the Seal Beach NWR and is 46 acres. Map 2.1-1 shows the location of the site at NAVWPNSTA Seal Beach.

5.1.1. History and Site Description

Over the years, historical engineering diagrams have referred to the area as the a) Lumber Yard, b) Ordnance Storage / Salvage Yard and c) Can Yard. For this PSI, the historical operations are referred to as the Ordnance Storage / Salvage Yard. The Ordnance Storage / Salvage Yard includes what is now defined as the Primer/Salvage Yard and the POLB Mitigation Pond (Figure 5.1-1 and Figure 5.1-2). The Primer/Salvage Yard and POLB Mitigation Pond are addressed as separate sites to create a distinction between the Primer/Salvage Yard terrestrial impacts and the POLB Mitigation Pond water related impacts.

From 1944 through the 1980s, the Primer/Salvage Yard was actively used for ordnance storage related to rocket and projectile (e.g., 20- to 40-mm) segregation, inspection, and repackaging as well as bomb and rocket overhaul (e.g., 2.75- and 7.2-inch). The Primer/Salvage Yard received thousands of cleaned projector casings from Buildings 101-102. It is also reported that damaged ammunition was stored in the Primer/Salvage Yard along with non-ordnance materials, such as lumber, batteries, and other types of scrap (NEESA, 1985).

The Primer/Salvage Yard (IRP Site 16) boundaries initially were defined in the Installation Assessment Survey (IAS) (NEESA, 1985) (Figure 5.1-2). As evaluated in this PSI, the Primer/Salvage Yard is roughly 46 acres, as shown in Map 5.1-2 and Figure 5.1-1. The site includes an area south of Bolsa Avenue, east of 7th Street, and west of 9th Street and the Marshalling Yard. The southern boundary for the site is marked by the edge of the north bank of the POLB Mitigation Pond.

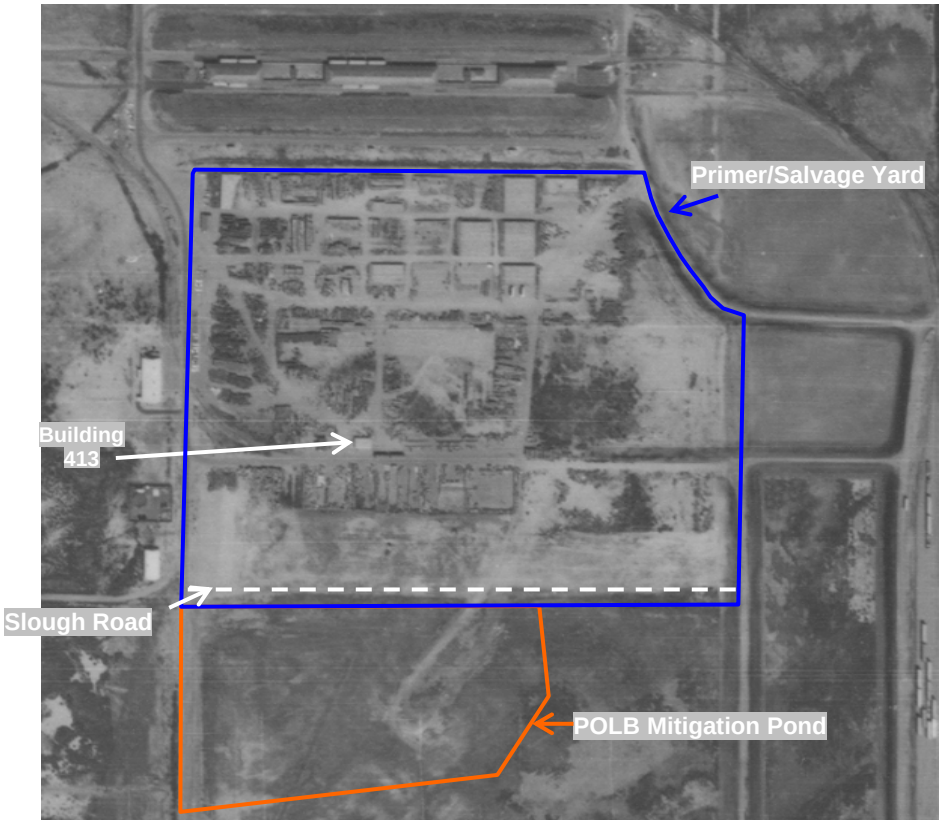

Figure 5.1-1: 1965 aerial photograph showing extent of Primer/Salvage Yard and the POLB Mitigation Pond

As presented in the 1985 IAS, three activities and areas of concern were identified at the Primer/Salvage Yard (Figure 5.1-2). The first area, the Depriming Area, was used from 1944 through 1982. It was reported as an unpaved area 100 to 400 feet south of former Building 413 that was used as a smoke pot filling station. Smoke pots were used as obscurants and filled with roughly 1 quart of petroleum product consisting primarily of kerosene called “fog oil.” Spillage of fog oil occurred, but the amount discharged to the soil is unknown. An estimated 10,000 smoke pots were filled with fog oil at this site (NEESA, 1985). During the same period, the area was also used for depriming ordnance projectiles. Primers, whose main MC was either smokeless powder or black powder, were removed from projectiles and placed in 5-gallon powder cans until they were shipped off station or sent to the Explosives Burning Ground (IRP Site 6) for disposal (NEESA, 1985).

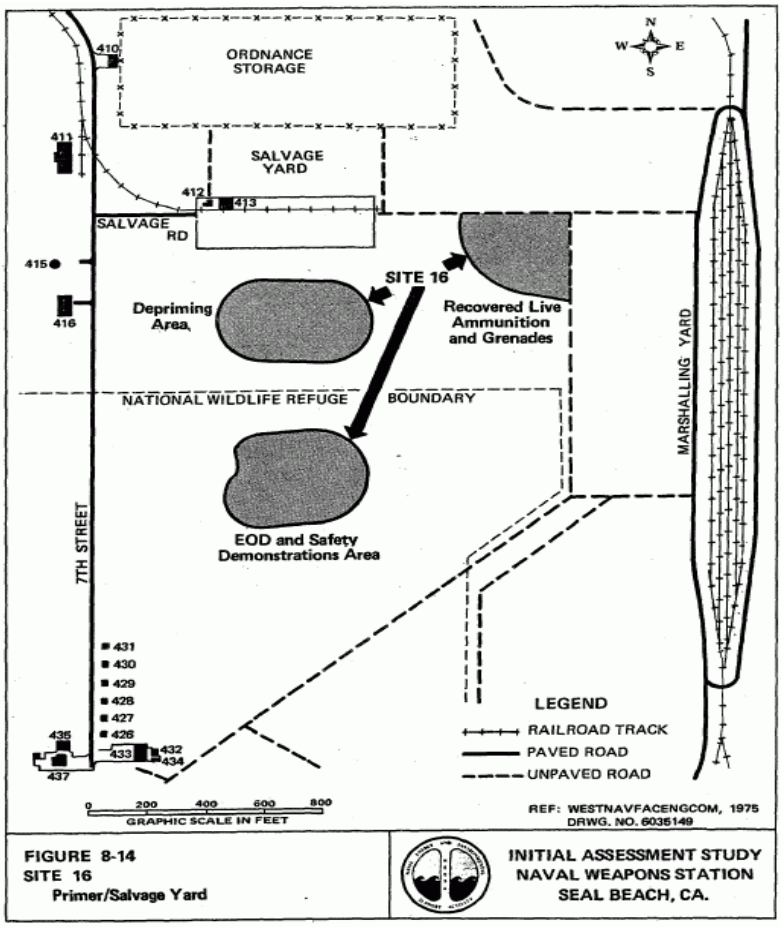

Figure 5.1-2: IRP Site 16 Primer/Salvage Yard
(*Source:* NEESA, 1985)

The second area was northeast of the depriming area and identified as the Recovered Live Ammunitions and Grenades area. Disposal of munitions is believed to have occurred roughly 775 feet east of Building 413 at an unknown date. The disposal items reportedly were mixed with non-energetic inert material (e.g., empty metal canisters, wooden packing materials, electronics). Station personnel recovered unknown quantities of live small-caliber ammunition and grenades from this area at an unspecified date (NEESA, 1985). The 1985 report recommended further action to address these items.

The third area was an EOD demonstration area and a safety demonstration area that were reported 900 feet south of former Building 413. This area is in what is now the POLB Mitigation Pond (Section 5.2).

It is also reported that munitions items stored at the Primer/Salvage Yard may have been disposed of by burial. A former site employee reported that munitions were unofficially buried underneath

the asphalt of the Primer/Salvage Yard (Ms. Tamashiro, pers. comm.). It was reported that munitions (possibly live) were tossed into the willow trees outside the northern boundary of the currently fenced yard (Mr. Carlock, Mr. Giorgice, and Mr. Durham, pers. comm.).

In the late 1990s, active operations ceased for the Primer/Salvage Yard area. During the cleanup of the yard, live ordnance items were found (Ms. Tamashiro and Mr. Pudenz, pers. comm.). It was also reported that when the Primer/Salvage Yard was operational there were certification errors in the classification of ordnance as inert or live and that it is possible that live munitions items may have been left in the Primer/Salvage Yard (Mr. Pudenz, pers. comm.).

During the November 2007 site visit, numerous munitions related items were observed (Section 5.1.2). These items were reported to EOD Mobile Unit 3, and a detachment responded with an emergency action on 14 December 2007 that blew in place four MEC items reported as not safe to handle or move (EODC Sonnenberg and EODC Scroggins, 2007; Ms. Tamashiro, pers. comm.).

Previous Investigations

Initial Assessment Study (NEESA, 1985)

The investigators concluded that only residual quantities of MC for both the EOD and the safety demonstrations would likely be present, and a confirmation study was not recommended for the area. However, they did recommend that an EOD survey be conducted at the site to retrieve and properly dispose of any possible munitions related to reported live small caliber ammunition and grenades.

Initial Assessment Study / Preliminary Assessment Addendum (NEESA, 1990)

During a site visit, it was noted that the area of the smoke pot filling and projectile depriming was paved and being excavated for additional surfacing. In addition, the IAS/PA document noted that a portion of IRP Site 16 had been excavated by the POLB (Section 5.2), and that “preliminary tests” by the POLB “reflect no hazardous characteristics.” The investigators recommended that EOD be contacted concerning the live ordnance finds in the area and that, based on existing information, the site posed no threat to human health or the environment.

Operable Unit (OU)-5 Site Inspection (SI) (NAVFACSW, 1998b)

OU-5 included IRP Site 16. Soil and groundwater samples from the site were collected and analyzed for volatile organic compounds, semivolatile organic compounds, nitrogen (N)

compounds (ammonia-N, nitrate-N, and Total Kjeldahl Nitrogen [TKN]), metals, and total petroleum hydrocarbons as diesel. Copper, zinc, ammonia, and TKN were detected in soil and groundwater. The constituents of potential concern (COPCs) detected in soil were copper, pyrene, nitrate, and trichlorofluoromethane. Total inorganic nitrogen (nitrate/nitrite plus ammonia) inside the fenced Primer/Salvage Yard was also detected at a concentration greater than typical for unfertilized soils and was suspected to possibly indicate explosives or explosives residue.

OU-4 and -5 Focused SI (NAVFACSW, 1998c)

Two groundwater monitoring wells were installed to the north of Slough Road, south of the current Primer/Salvage Yard fence. Water samples were collected from the wells and from surface water collected near the northern bank of the POLB Mitigation Pond and analyzed for antimony.

OU-4 and -5 Final Screening Ecological Risk Assessment (NAVFACSW, 1999)

An ecological risk assessment was prepared as a supplement to the OU-5 SI report and the OU-4 and -5 Focused SI report (NAVFACSW, 1998b and 1998c). Previously detected maximum metals concentrations for copper and zinc in soil were evaluated to exceed their respective upper level background values (ULBVs) inside the fenced portion of the Primer/Salvage Yard. In addition, the nitrogen compounds ammonia plus nitrate (inorganic nitrogen) and TKN were detected and, therefore, retained as COPCs. Maximum and average concentrations of nickel and zinc exceeded their respective Conservative Estimates of Chronic Values in groundwater at IRP Site 16, with the highest concentration of zinc exceeding the Chronic Toxicity Value by 186-fold (NAVFACSW, 1999; CALEPA SWRCB, 2001). Ammonia and TKN were also detected in groundwater and, therefore, were retained as COPCs. Despite the elevated COPC, the soil receptor pathways were evaluated to be incomplete for metals; the elevated concentrations were located inside the locked and fenced Primer/Salvage Yard.

The possible discharge of nickel- and zinc-contaminated groundwater to the 7th Street POLB Mitigation Pond was identified in the ecological risk assessment report. The investigators recommended that samples be collected from the northern banks of the pond. However, it was noted that concentrations of zinc and sodium varied in rough proportion to one another suggesting that high zinc values could be analytical artifacts caused by seawater interference.

EarthRadar® Technology (Bakhtar Associates, 1999)

Bakhtar Associates, an independent contractor with the U.S. Air Force as a service to the Navy, performed a UXO survey of IRP Site 16 in November 1999 and March 2000 using EarthRadar®, a low-power, wideband radio-frequency sensor (i.e., ground penetrating radar). Two acres of land at the corner of Slough Road and 9th Street and at the corner of Slough Road and 7th Street were investigated. The results of the survey indicate the presence of buried small arms casings, shell fragments, and rusted metal debris with no energetic material detected. However, this technology has been shown to have a high likelihood of both false positive and false negative results (Institute for Defense Analysis, 2001). This area has been graded for agricultural purposes since then and MEC was not encountered.

Focused SI Phase II Report, (NAVFACSW, 2002)

Samples were collected from groundwater and analyzed for nickel and zinc (total and dissolved) and total suspended solids. In addition, three groundwater samples were analyzed for total metals. Nickel and zinc were detected at concentrations greater than ULBVs. In addition, the potential presence of buried live ammunition along the "eastern portion of the site" (i.e., the reported live ammunition and grenades find area) was identified as a data gap to be resolved. Based on a lack of complete receptor pathways, no further action was recommended for IRP Site 16 for the following reasons:

- The results of the OU-4 and -5 Focused SI indicated no significant human health risks from soil.
- The results of the OU-4 and -5 screening ecological risk assessment indicated no significant ecological risks from soil.
- The groundwater exposure pathway for humans is incomplete because the groundwater is saline.
- There are no significant risks to aquatic ecological receptors because significant amounts of metals-contaminated groundwater are not suspected to discharge to the POLB Mitigation Pond. However, it was noted that high dissolved nickel and zinc were detected in the Primer/Salvage Yard area and that additional site management practices were recommended to prevent future releases of metals from nearby scrap metal storage operations.
- The UXO survey (see EarthRadar® Technology summary above) conducted in this area indicated the absence of energetic material and, hence, the absence of risks to human and ecological receptors at the site.

5.1.1.1. Topography

The Primer/Salvage Yard terrain is flat and ranges in elevation from 7 feet asl at its north boundary to 4 feet asl at its southern boundary (NAVFACSW, 2002; POLB Diagram, 1986). For additional information on the topography of NAVWPNSTA Seal Beach, see Section 3.2.

5.1.1.2. Geology

Alluvial and coastal deposits (Qal) characterize the Primer/Salvage Yard surficial geology (NAVFACSW, 1998a). Section 3.3 includes a more detailed description of the geology of NAVWPNSTA Seal Beach.

5.1.1.3. Soil and Vegetation Types

Soil at the Primer/Salvage Yard is predominantly clay and silt layers. The IAS notes the area to be characterized by drained Bolsa silty clay loam, which occurs on large alluvial fans and is moderately to slowly permeable (NEESA, 1985). Runoff is slow over bare level soil, and the erosion hazard is slight. The soil is moderately alkaline and calcareous to a depth of about 49 inches. Section 3.4 includes a general description of the soil types at NAVWPNSTA Seal Beach.

The vegetation in the area of the Primer/Salvage Yard is non-native annual grasses (NAVWPNSTA Seal Beach, 2007). Along the northern boundary of the site is a dense row of southern willow scrub trees. To the east are a nonagricultural area with low sparse grasses and graded agricultural areas. Section 3.4 includes a general description of the vegetation types at NAVWPNSTA Seal Beach.

5.1.1.4. Hydrology

Surface water generally flows southwest toward the POLB Mitigation Pond and then through channels in the Seal Beach NWR to Anaheim Bay and the Pacific Ocean. Section 3.5 includes a general description of the hydrology of NAVWPNSTA Seal Beach.

5.1.1.5. Hydrogeology

The depth to groundwater at the southern edge of the site is 4.5 feet bgs. The depth to groundwater to the north at nearby IRP Site 37 (Bolsa Avenue Storage Yard) is reported at 15 to 20 feet bgs (NAVFACSW, 1998b). Depth to groundwater varies and is tidally influenced by the presence of the POLB Mitigation Pond to the south (NAVFACSW, 2002). Shallow groundwater flows to the northeast, away from the POLB Mitigation Pond (NAVFACSW, 1999). Because of

salt-water intrusion, shallow groundwater at the site is saline to brackish and is not used for drinking water. Lateral groundwater movement in the moderately permeable shallow aquifer is estimated to be several hundred feet per year (NEESA, 1985). Navy Well 3, roughly 1,000 feet east/northeast of the site, is 680 feet deep (screened at 615 feet bgs) and currently is used for agricultural irrigation (Chris Higgins, 1984; Ms. Tamashiro, pers. comm.). Section 3.6 includes a general description of the hydrogeology of NAVWPNSTA Seal Beach.

5.1.1.6. Cultural and Natural Resources

There are no known significant cultural resources within or adjacent to the site (NAVFACSW, 2002; COUP Incorporated, n.d.). The Primer/Salvage Yard is not noted to include any natural resources, although the Seal Beach NWR is located adjacent to the site (NAVWPNSTA Seal Beach, 2007). Section 3.7 includes a description of the cultural and natural resources of NAVWPNSTA Seal Beach.

5.1.1.7. Endangered and Special Status Species

Federally listed endangered or threatened species are documented as present in the area, particularly in the Seal Beach NWR. These include the California brown pelican (*Passerculus sandwichensis beldingi*), California least tern (*Sterna antillarum browni*), light-footed clapper rail (*Rallus longirostris levipes*), and the western snowy plover (*Charadrius alexandrinus nivosus*) (NAVWPNSTA Seal Beach, 2007; CDFG, 2007). Additional information on species of concern for NAVWPNSTA Seal Beach is presented in Section 3.8.

5.1.2. Visual Survey Observations and Results

A visual survey of the Primer/Salvage Yard was conducted on 14 November 2007. During the visual survey, the following Malcolm Pirnie team members were present: Ms. Erin Caruso (Team Leader), Mr. Michael Schulman, Mr. Gary Storrs (UXO Safety Supervisor [SS]), Ms. Gina Gerritzen, and Mr. Michael Asakawa. The following Navy representatives were present during the visual survey: Ms. Tamashiro and Mr. Grady Gordon. The Primer/Salvage Yard was 100% visually surveyed, with the exception of a dense row of bushes along the northern boundary. The field team conducted the visual survey by walking the perimeter of the entire site, then walking several transects across the Primer/Salvage Yard while looking for topographical abnormalities, scarred terrain, and stressed vegetation that may have indicated ordnance disposal or activity.

The 24-acre fenced portion of the Primer/Salvage Yard has a locked gate (Figure 5.1-3) and was predominantly surfaced with decomposed asphalt or overlain by a thin layer of gravel. The unfenced area of the site was unpaved and maintained as unused land. The unpaved portions of the site consisted of sandy flat habitat that was vegetated with low and sparse grass with some areas devoid of vegetation. The only structure on site was a broken 1-ton scale (Figure 5.1-4). Two monitoring wells were observed just north of Slough Road.

Figure 5.1-3: View of the locked gate entering the fenced yard, facing east (Photograph taken during the November 2007 on-site visual survey.)

Figure 5.1-4: View of the paved area inside the fenced yard looking north. Scale is likely Building 412 (adjacent to Building 413). (Photograph taken during the November 2007 on-site visual survey.)

Various MEC related items were noted inside the fenced yard. MEC related items identified during the site reconnaissance included 1) a 2.75-inch high explosive style warhead, colored blue, with inert filling; 2) an intact submunition BLU63 T-1 series (baseball size), colored blue; 3) an expended point detonating fuze (PD fuze); and 4) expended powder train time fuzes (PTTFs). In addition, numerous half shells from M30 or M40 series submunitions (golf ball size) and 5.56-mm small arms and .50-caliber casings were found (Figure 5.1-5 through Figure 5.1-10). Additional munitions related items were noted along the northern boundary of the site outside of the fenced portion of the Primer/Salvage Yard.

Figure 5.1-5: 2.75-Inch practice warhead, colored blue (Photograph taken during the November 2007 on-site visual survey.)

Figure 5.1-6: BLU-36 (T-1) half hemisphere (Photograph taken during the November 2007 on-site visual survey.)

Figure 5.1-7: Expended PD fuze (Photograph was taken during the November 2007 on-site visual survey.)

Figure 5.1-8: Expended PTTF (Photograph was taken during the November 2007 on-site visual survey.)

Figure 5.1-9: 5.56-mm small arms casings (Photograph was taken during the November 2007 on-site visual survey.)

Figure 5.1-10: 50-caliber cartridge casings (Photograph was taken during the November 2007 on-site visual survey.)

A visual depiction of the site reconnaissance is provided on Map 5.1-1 located at the end of Section 5.1.12. Additional site details are illustrated on Map 5.1-2, also located at the end of Section 5.1.12.

5.1.3. Munitions and Munitions Related Materials Associated with the Site

This section describes the munitions or munitions related materials known or suspected to be at the site, including the types and estimated maximum penetration depths. This includes both MEC and nonhazardous munitions related scrap (e.g., fragmentation, base plates, inert mortar fins). Potential ordnance concentration areas are presented, along with a discussion on the presence of special consideration ordnance.

The types of MEC likely stored in the Primer/Salvage Yard area include live, inert and/or damaged rockets (e.g., 2.75- and 7.2-inch), projectiles (e.g., 20- to 40-mm), grenades, obscurants (i.e., fog oil), black and smokeless powders, primers, fuzes, small arms ammunition, cartridge actuated devices (CADs), propellant actuated devices (PADs), and submunitions (NEESA, 1985).

Based on the information obtained during the data collection process, the Primer/Salvage Yard is not suspected to contain chemical warfare materiel (CWM) filled munitions, electrically fuzed munitions, or depleted uranium (DU) associated munitions.

5.1.4. MEC Presence

The entire site has been subdivided and categorized into one of three levels of MEC presence, including: known MEC areas, suspected MEC areas, and areas not suspected to contain MEC.

Known MEC areas are those areas where MEC were found in the past, a removal of MEC was conducted, EOD responses occurred at the site, or MEC were found during the site visit. Suspected MEC areas are those areas where no MEC have been found at the site; however, training or disposal may have occurred at the site, historical documents indicate MEC may be present, or there is the potential for MEC to be found at the site. Areas not suspected to contain MEC are those where full removals have occurred or no records have been found of munitions being used at the site.

Map 5.1-3 illustrates the munitions characterization of the Primer/Salvage Yard and is provided at the end of Section 5.1.12. The MEC presence is discussed below.

5.1.4.1. Known MEC Areas

Based on historical documents, interviews, and the November 2007 site visit, the entire Primer/Salvage Yard is considered a known MEC area. Munitions related items were noted inside the fenced yard during the site visit (Figure 5.1-3 through Figure 5.1-10). Munitions related scrap observed outside of the fenced portion includes a missile fin located to the north of the fence and a few cartridge casings to the south of the fence. It is suspected that munitions, visible along the northern bank of the POLB Mitigation Pond (Section 5.2), likely extend under and to the north of Slough Road.

5.1.4.2. Suspected MEC Areas

The entire Primer/Salvage Yard is a known MEC area.

5.1.4.3. Areas Not Suspected to Contain MEC

The entire Primer/Salvage Yard is a known MEC area.

5.1.5. Ordnance Penetration Estimates

The depth to which munitions penetrate below the ground surface depends on many factors, including the type of soil, the angle of impact, the size of the munition, the velocity at impact, and site-specific environmental conditions. Over the years, the DoD has studied and modeled munitions penetration depths and has issued various guidance and technical documents on the subject. For the purposes of this PSI, maximum probable penetration depths are estimated following guidance listed in the latest draft (July 2002) of the DoD Directive on explosives safety issued by the DoD Explosives Safety Board (DoD Directive 6055.9 *DoD Ammunition and*

Explosives Safety Standards). The directive refers to Technical Manual 5.855.1 and NAVFAC P-1080.

Munitions found below the ground surface at the Primer/Salvage Yard would be due to burial not penetration. If present, the depth of any buried MEC would vary depending on the burial practices of the time. It is suspected that munitions, visible along the northern bank of the POLB Mitigation Pond (Section 5.2), likely extend under and to the north of Slough Road.

5.1.6. MC

Based on previous SI results (Section 5.1.1), copper and zinc concentrations in soil and groundwater are greater than their ULBVs for soil and Conservative Chronic Values in groundwater (CALEPA SWRCB, 2001). In addition, total inorganic nitrogen inside the currently fenced Primer/Salvage Yard was detected at concentrations greater than typical for unfertilized soils and possibly indicates explosives or explosives residue (NAVFACSW, 1998b). MC related to the removal of primers from projectiles prior to being placed in 5-gallon cans include black powder (e.g., potassium nitrate) and smokeless powder (e.g., nitrocellulose, nitroglycerin, nitroguanidine) (NEESA, 1985). Metals of concern related to black and smokeless powder include antimony, arsenic, copper, nickel, and zinc. Small arms typically have projectiles composed of lead cores (typically 85% by weight) with copper alloy jackets. The presence of explosives (e.g., RDX, HMX, TNT) related to rockets is also possible given the site history. In addition, the obscurant fog oil (kerosene / mineral oil) reportedly was spilled at the site in unknown quantities.

5.1.7. Contaminant Migration Routes

The natural migration (e.g., soil erosion) of MEC is not suspected given the low erosion capability of soils at the site (Section 5.1.1.3). Earth moving associated with future construction, excavation, and maintenance at the site are mechanisms by which both MEC and MC in soil can be physically redistributed at the surface and to the subsurface. Surface migration of MC may occur naturally through surface soil erosion and by wind and/or mechanically driven dust generation. MC potentially present in surface soil can also be bioaccumulated by biota. MC can potentially leach through soil to groundwater in the shallow alluvial aquifer. A detailed conceptual site model (CSM) of migration and exposure pathways is presented in Section 5.1.11.

5.1.8. Receptors

Human receptors include Navy personnel, contractors (including maintenance and environmental), Navy-escorted visitors, and farmers. Ecological receptors (biota) are also potential receptors.

5.1.8.1. Nearby Populations

NAVWPNSTA Seal Beach is located in an urban environment adjacent to the cities of Seal Beach, Huntington Beach, and Westminster. The population density given for the U.S. Census Bureau Tract 995.02 (includes only NAVWPNSTA Seal Beach) is 90 persons per square mile. Census tracts adjacent to the station (e.g., Census tracts 995.10 and 995.12) have population densities ranging from 5,000 to 8,000 persons per square mile (U.S. Census, 2000).

NAVWPNSTA Seal Beach has a combined workforce of 150 military personnel and 600 civilian personnel. Population data for the vicinity include the following (U.S. Census, 2000):

- City of Seal Beach: 24,154
- City of Huntington Beach: 189,594
- City of Westminster: 88,207

5.1.8.2. Buildings Near/Within Site

A broken scale is located in the currently fenced area of the Primer/Salvage Yard (Figure 5.1-4). A blockers and bracers shop is located nearby to the west.

5.1.8.3. Utilities On/Near Site

The Primer/Salvage Yard has multiple phone lines and fire hydrants on site. U.S. government phone lines run along the northern boundary of the site and through the central and eastern portions of the site. Fire hydrants are located along the western boundary of the site and just beyond its northern boundary; one fire hydrant is located in the southwestern portion of the site.

5.1.9. Land Use

The Primer/Salvage Yard is currently not in use. The adjacent surrounding land is both unused nonagricultural and used agricultural land. Agricultural land use occurs to the north and east of the Primer/Salvage Yard. The adjacent Seal Beach NWR to the south and nearby to the west provides wetland habitat. The site potentially may be used in the future as a storage yard or for agriculture. Agriculture is also a potential future land use if the MEC and MC hazards are

eliminated. Because the area is a known MEC site, no ground maintenance is conducted at the site.

The surrounding Seal Beach area has numerous private companies conducting military and space related activities. Most of the adjacent private weapons, satellite, and aerospace facilities are owned by Boeing. The Los Alamitos Joint Forces Training Base, which has units of the California National Guard and Army Reserve, is three miles north of Highway 405.

5.1.10. Access Controls/Restrictions

The Primer/Salvage Yard is located on NAVWPNSTA Seal Beach, which is a fenced and guarded installation. Security Forces personnel are responsible for maintaining law and order and for implementing access control policies and procedures. Access to the Primer/Salvage Yard from within NAVWPNSTA Seal Beach is controlled by vehicular security patrol. Roughly one-half of the site is fenced and secured by a locked gate with signs warning of UXO hazards. The area outside of the fenced area is open to personnel.

5.1.11. CSM

This CSM was developed following guidance documents issued by the USEPA for hazardous waste sites and the U.S. Army Corps of Engineers (USACE) for ordnance and explosives sites. Guidance documents include the USEPA's *Guidance for Conducting Remedial Investigations and Feasibility Studies under CERCLA* (EPA/540/G-89/004) and the *Final USACE CSM Guidance Development of Integrated Conceptual Site Models for Environmental Ordnance and Explosives Sites* (USACE, 2003).

The CSM describes the site and its environmental setting. The CSM presents information regarding: 1) MEC and/or MC known or suspected to be at the site; 2) current and future reasonably anticipated or proposed uses of the real property; and 3) actual, potentially complete, or incomplete exposure pathways linking them. The CSM is the basis for the prioritization and remediation cost estimate.

The CSM is presented in a series of information profiles that provide information about the site. The information profiles are included in Table 5.1-1.

Table 5.1-1: CSM Information Profiles – Primer/Salvage Yard

Profile Type	Information Needs	PSI Findings
Range/Site Profile	Installation Name	NAVWPNSTA Seal Beach
	Installation Location	NAVWPNSTA Seal Beach is located in the city of Seal Beach in Orange County, California, approximately 26 miles south of the Los Angeles urban center and 8 miles east of Long Beach.
	Range/Site Name	Primer/Salvage Yard
	Range/Site Location	The Primer/Salvage Yard is located south of Bolsa Avenue, east of 7th Street, west of 9th Street, and north of the northern bank of the 7th Street POLB Mitigation Pond. The pond marks the southern boundary of the Primer/Salvage Yard.
	Range/Site History	The Primer/Salvage Yard was used from 1944 to the late 1990s for munitions inspection, processing, segregation, and/or storage.
	Range/Site Area and Layout	The Primer/Salvage Yard occupies approximately 46 acres, approximately 24 acres of which are fenced.
	Range/Site Structures	No buildings are located within the site boundary. Former Buildings 412 and 413 were located in the currently fenced area of the site.
	Range/Site Boundaries	Map 2.1-1 shows the location of the site. N: A line of brush runs along the northern boundary of the site. Further to the north is Bolsa Road. The installation boundary is roughly 2 miles north of the site and is bordered by the city of Seal Beach. S: The 40-acre 7th Street POLB Mitigation Pond, which is part of the Seal Beach NWR, is located adjacent to the site on the south. The installation boundary is located roughly 0.6 miles to the south. Beyond the installation boundary is the Orange County Flood Control Channel, which flows into Anaheim Bay and then to the Pacific Ocean, and the city of the Huntington Beach. W: The west boundary is 7th Street; IRP Site 74 (Old Skeet Range) is roughly 600 feet farther to the west. The installation boundary is roughly 1.75 miles to the west; the installation is bordered by the city of Seal Beach. E: Low grasses, railroad sidings, and agricultural fields extend to the east. The Marshalling Yard is located roughly 600 feet to the east. The installation boundary is roughly 1 mile away; the installation bordered by the cities of Westminster and Huntington Beach.

Table 5.1-1: CSM Information Profiles – Primer/Salvage Yard		
Profile Type	**Information Needs**	**PSI Findings**
	Range/Site Security	The Primer/Salvage Yard is located on NAVWPNSTA Seal Beach, which is a fenced and guarded installation. Security Forces personnel are responsible for maintaining law and order and for implementing access control policies and procedures. Access to the Primer/Salvage Yard from within NAVWPNSTA Seal Beach is controlled by vehicular security patrol. Roughly one-half of the site is fenced and secured by a locked gate with signs warning of UXO hazards. The area outside of the fenced area is open to personnel.
Munitions/ Release Profile	Munitions Types	The types of munitions likely stored in the Primer/Salvage Yard area include live, inert and/or damaged rockets (e.g., 2.75- and 7.2-inch), projectiles (e.g., 20- to 40-mm), grenades, obscurants (i.e., fog oil), black and smokeless powders, primers, fuzes, small arms ammunition, CADs, PADs, and submunitions (NEESA, 1985).
	Maximum Probability Penetration Depth	Penetration from munitions use is not expected. The maximum depth of munitions would be related to burial. It is also suspected that munitions, visible along the northern bank of the POLB Mitigation Pond, likely extend under and to the north of Slough Road.
	MEC Density	Based on reported use of the site and reported burial of munitions, MEC are estimated to range from very low (one to two items per acre) to high (greater than 40 items per acre).
	MEC Scrap/ Fragments	Various munitions or munitions related items were observed during the site visit. These include 1) a 2.75-inch high explosive style warhead, colored blue, with inert filling; 2) an intact submunition BLU63 T-1 series (baseball size), colored blue; 3) an expended PD fuze; and 4) expended PTTF. In addition, numerous half shells from M30 or M40 series submunitions (golf ball size) and 5.56-mm and .50-caliber casings were found. The items were mostly scattered within the fenced area of the Primer/Salvage Yard, other than a missile fin located to the north of the fence and a few cartridge casings to the south of the fence. Ground penetrating radar detected small arms casings and shell fragments buried to the south of the fenced, north of Slough Road in 1999/2000.
	Associated MC	Based on previous SI results (Section 5.1.1), copper and zinc concentrations in soil and groundwater are greater than the ULBVs for soil and Conservative Chronic Values in groundwater (CALEPA SWRCB, 2001). In addition, total inorganic nitrogen inside the currently fenced Primer/Salvage Yard was detected at concentrations greater than typical for

Table 5.1-1: CSM Information Profiles – Primer/Salvage Yard		
Profile Type	**Information Needs**	**PSI Findings**
		unfertilized soils and possibly indicates explosives or explosives residue (NAVFACSW, 1998b). MC related to the removal of primers from projectiles prior to being placed in 5-gallon cans includes black powder (e.g., potassium nitrate) and smokeless powder (e.g., nitrocellulose, nitroglycerin, nitroguanidine) (NEESA, 1985). Metals of concern related to black and smokeless powder include antimony, arsenic, copper, nickel, and zinc. Small arms typically have projectiles composed of lead cores (typically 85% by weight) with copper alloy jackets. The presence of explosives (e.g., RDX, HMX, TNT) related to rockets is also possible given site history. In addition, the obscurant fog oil (kerosene/mineral oil) reportedly was spilled at the site in unknown quantities.
	Migration Routes/ Release Mechanisms	The natural migration (e.g., soil erosion) of MEC is not suspected given the low erosion capability of soils at the site. Earth moving associated with future construction, excavation, and maintenance at the site are mechanisms by which both MEC and MC in soil can be physically redistributed at the surface and to the subsurface. Surface migration of MC may occur naturally through surface soil erosion and by wind and/or mechanically driven dust generation. MC potentially present in surface soil can also be bioaccumulated by biota. MC potentially can leach through soil to groundwater in the shallow alluvial aquifer.
Physical Profile	Climate	The climate at NAVWPNSTA Seal Beach is typical of the maritime subclimate within the prevailing California Mediterranean climate: mild winters, cool summers, high relative humidity, and frequent early morning clouds that lead to afternoon sunshine. The annual average temperature is 74°F. Summer average high temperatures range from 77°F to 84°F, and average lows range from 60°F to 65°F. Winters tend to be moderate, with highs typically 67°F and average lows ranging from 45°F to 47°F. Yearly precipitation averages 13 inches per year, with February being the wettest month, averaging 3 inches per year, and July the driest, averaging 0.02 inches per year (WRCC, n.d.). Periodically, the region will experience *El Niño* conditions, which tend to bring wetter winters to the area through heavy storms. The prevailing winds are westerly with an average velocity of 10 knots, although occasionally, strong dry northeasterly winds descend the mountain slopes in the fall, winter, and early spring months (NAVFACSW, 1979). The strongest winds that occur for the region are associated with the winter and spring storms off the Pacific Ocean (NAVFACSW, 2005).

Table 5.1-1: CSM Information Profiles – Primer/Salvage Yard

Profile Type	Information Needs	PSI Findings
	Topography	The Primer/Salvage Yard terrain is flat, and ranges in elevation from 7 feet asl at its north boundary to 4 feet asl at its southern boundary (NAVFACSW, 2002; POLB Diagram, 1986).
	Geology	Primer/Salvage Yard surficial geology is characterized by alluvial and coastal deposits (Qal) (NAVFACSW, 1998a).
	Soil	Soil at the Primer/Salvage Yard is predominantly clay and silt layers. The IAS and Installation Natural Resource Management Plan note the area to be characterized by drained Bolsa silty clay loam, which occurs on large alluvial fans and is moderately to slowly permeable (NEESA, 1985; NAVWPNSTA Seal Beach, 2007). Runoff is slow over bare level soil, and the erosion hazard is slight. The soil is moderately alkaline and calcareous to a depth of about 49 inches (NEESA, 1985).
	Hydrogeology	The depth to groundwater at the southern edge of the site is 4.5 feet bgs. The depth to groundwater to the north at nearby IRP Site 37 (Bolsa Avenue Storage Yard) is reported at 15 to 20 feet bgs (NAVFACSW, 1998b). Depth to groundwater varies and is tidally influenced by the presence of the POLB Mitigation Pond to the south (NAVFACSW, 2002). Shallow groundwater flows to the northeast, away from the POLB Mitigation Pond (NAVFACSW, 1999). Because of salt-water intrusion, shallow groundwater at the site is saline to brackish and is not used for drinking water. Lateral groundwater movement in the moderately permeable shallow aquifer is estimated to be several hundred feet per year (NEESA, 1985). Navy Well 3, roughly 1,000 feet east/northeast of the site, is 680 feet deep (screened at 615 feet bgs) and currently is used for agricultural irrigation (Chris Higgins, 1984; Ms. Tamashiro, pers. comm.).
	Hydrology	Surface water generally flows southwest toward the POLB Mitigation Pond and then through channels in the Seal Beach NWR to Anaheim Bay and the Pacific Ocean.
•	Vegetation	The vegetation in the area of the Primer/Salvage Yard is non-native annual grasses. Along the northern boundary of the site is a dense row of southern willow scrub trees, dominated by several *Salix* species. To the immediate east is a nonagricultural area with low sparse grasses, beyond which are lands used for agriculture (NAVWPNSTA Seal Beach, 2007).

Table 5.1-1: CSM Information Profiles – Primer/Salvage Yard

Profile Type	Information Needs	PSI Findings
Land Use and Exposure Profile	Current Land Use	The Primer/Salvage Yard is no longer in use. Agricultural land use occurs to the north and east of the Primer/Salvage Yard. The adjacent Seal Beach NWR to the south and nearby to the west provides wetland habitat.
	Current Human Receptors	Navy personnel and contractors (including maintenance personnel), Navy-escorted visitors, And environmental and ecological researchers are current human receptors. Leaseholder farmers and farm workers inhaling dust potentially impacted with MC are also potential receptors.
	Current Activities (frequency, nature of activity)	The Primer/Salvage Yard is no longer in use. Because the area is a known MEC site, no ground maintenance is conducted at the site.
	Potential Future Land Use	Potential future land uses include storage and unused land. Agriculture is also a potential future land use if the MEC hazard is eliminated.
	Potential Future Human Receptors	Future receptors are expected to be the same as current receptors.
	Potential Future Land Use Related Activities	Navy personnel and contractors potentially may use the site for storage. Construction activities may occur related to repaving the cracked and decomposing asphalt within the Primer/Salvage Yard. Future activities at the site may also include environmental and ecological surveys or reseeding with native grasses (NAVWPNSTA Seal Beach, 2007). Agriculture is also a potential future land use if the MEC hazard is eliminated.
	Zoning / Land Use Restrictions	Because of the reported presence of MEC, roughly one-half of the site is fenced with access restricted to authorized personnel only. The area outside of the fenced yard is also reported to contain MEC (e.g., cartridge casings), although there are no physical land restrictions to the unfenced area.
	Demographics /Zoning	NAVWPNSTA Seal Beach has a combined workforce of 150 military personnel and 600 civilian personnel. Population data for the vicinity include the following (U.S. Census, 2000): • City of Seal Beach: 24,154 • City of Westminster: 88,207 • City of Huntington Beach: 189,594 • Orange County: 2,846,289

Table 5.1-1: CSM Information Profiles – Primer/Salvage Yard		
Profile Type	**Information Needs**	**PSI Findings**
	Beneficial Resources	The Seal Beach NWR is adjacent to the south of the installation, which provides habitat for federally and state listed threatened and endangered species. In addition, the INRMP notes the site area as an area used by the burrowing owl (*Athene cunicularia*), merlin (*Falco columbarius*), and Cooper's hawk (*Accipiter cooperii*) (NAVWPNSTA Seal Beach, 2007).
Ecological Profile	Habitat Type	Low non-native grasses to barren land
	Degree of Disturbance	Nearly one-half of the site is fenced and paved with asphalt or concrete. The remainder of the site is undisturbed open land.
	Ecological Receptors and Species of Special Concern	Reported mammals at the installation include various species of pocket gophers, voles, shrews, and ground squirrels, Audubon's cottontail rabbit (*Sylvilagus audubonii*), and brush rabbit (*Sylvilagus bachmani*). Nineteen species of raptors are known to occur on NAVWPNSTA Seal Beach, nine of which nest on the station: red-tailed hawk (*Buteo jamaicensis*), Swainson's hawk (*Buteo swainsoni*), great-horned owl (*Bubo virginianus*), burrowing owl (*Athene cunicularia*), loggerhead shrike (*Lanius ludovicianus*), American kestrel (*Falco sparverius*), great blue heron (*Ardea herodias*), common raven (*Corvus corax*), and American crow (*Corvus brachyrhynchos*). The avian wildlife forages over a large area and would spend relatively little time on-site. Aquatic ecological receptors include marine invertebrates and fish, including the federally endangered tidewater goby (*Eucyclogobius newberryi*), which inhabit the POLB Mitigation Pond (NAVFACSW, 2005; NAVWPNSTA Seal Beach, 2007). Resident or migrants bird species listed by federal or state agencies, or both, as threatened or endangered include the following: • Belding's savannah sparrow (*Passerculus sandwichensis beldingi*) • California brown pelican (*Pelecanus occidentalis californicus*) • California least tern (*Sterna antillarum browni*) • Light-footed clapper rail (*Rallus longirostris levipes*) • Western snowy plover (*Charadrius alexandrinus nivosus*) The breeding season for these shorebird and salt marsh species extends from approximately late January to mid-September. The California least tern occupies the Seal Beach NWR only during the breeding season with most of its food supply coming from the Seal Beach NWR during that period (NAVFACSW, 2005).

Table 5.1-1: CSM Information Profiles – Primer/Salvage Yard		
Profile Type	**Information Needs**	**PSI Findings**
	Relationship of MEC/MC Sources to Habitat and Potential Receptors	Ecological receptors may come into direct contact with MEC or MC in soil. Ecological receptors coming into contact with MEC and thereby creating an explosive hazard is unlikely, but should be considered where threatened and/or endangered species may be present. Receptors may be exposed to MC that have been incorporated into the food chain (e.g., bioaccumulated in plants and animals). Sensitive species (e.g., the light-footed clapper rail) nest near the site and may consume fish that have taken up MC. Various mammals and other animals that inhabit the area may come into contact with MC while burrowing, foraging, or nesting. They may also consume plants and/or prey that have bioaccumulated MC.

A key element of the CSM is the exposure pathway analysis. For MEC, a complete or potentially complete exposure pathway must include the following components: 1) a source (e.g., locations where MEC are expected to be found); 2) access (e.g., controlled or uncontrolled access, items on the surface or within the subsurface); 3) an activity (e.g., nonintrusive grounds maintenance, intrusive construction); and 4) receptors (e.g., Navy personnel, construction workers, recreational users, authorized visitors). It is important to recognize that environmental mechanisms (e.g., erosion) and/or human intervention may result in the repositioning of MEC.

For MC, a complete or potentially complete exposure pathway must include the following components: 1) a source (e.g., locations where MC are expected to be found); 2) an exposure medium (e.g., surface soil); 3) an exposure route (e.g., dermal contact); and 4) receptors (e.g., Navy personnel, construction workers, recreational users, authorized visitors). If the point of exposure is not at the same location as the source, the pathway may also include a release mechanism (e.g., erosion) and a transport medium (e.g., surface water).

The potential interactions between the source and receptors are assessed differently for MEC and MC. For MEC, interaction between the potential receptors and an MEC source has two components. The receptor must have access to the source and must engage in some activity that results in contact with individual MEC items within the source area. For MC, interaction between the source and receptors involves a release mechanism for the MC, an exposure medium that contains the MC, and an exposure route that places the receptor into contact with the contaminated medium.

A graphical illustration of the details of the CSM is included in Figure 5.1-11 and Figure 5.1-12.

MEC Interactions and Pathway Analysis

The exposure pathway analysis for MEC presents the exposure pathways based on historical and visual evidence that indicates the presence of MEC at the Primer/Salvage Yard.

The presence of human and biota receptors on-site results in the potential for complete surface MEC exposure pathways via handling or treading underfoot. Subsurface MEC exposure pathways are potentially complete for human and biota receptors at the site from intrusive activities (e.g., subsurface sampling and/or construction for human receptors and burrowing for biota receptors). Ecological receptors coming into contact with MEC and thereby creating an explosive hazard is unlikely, but should be considered where threatened and/or endangered species may be present.

MC Interactions and Pathway Analysis

Potential receptors include both humans and biota that may be exposed to MC in the source medium. For MC, there is a potential release mechanism for MC (e.g., physical migration, uptake into the food web), an exposure medium containing the MC (e.g., soil), and a potential exposure route (e.g., incidental ingestion, dermal contact, inhalation) that places the receptor into contact with the contaminated medium. Pathways for surface water / sediment and for soil are discussed below.

Surface Water / Sediment

There are no surface water bodies within the Primer/Salvage Yard site boundary. Consequently, all direct exposure pathways to humans and biota are evaluated as incomplete. However, the 7th Street 40-acre POLB Mitigation Pond is located at the southern boundary of the Primer/Salvage Yard and likely receives runoff and erosion from the Primer/Salvage Yard. The POLB Mitigation Pond is being evaluated as a separate Navy site in this PSI.

Soil

Release mechanisms for MC in soil with potentially complete pathways include plant and animal uptake, physical migration, and leaching to subsurface soil. Human receptors may come in contact with MC in surface and/or subsurface soil during activities for operations and maintenance (e.g., MEC/debris clearing, subsurface utility trenching), construction/demolition (e.g., expanding fence, asphalt repair), and environmental activities (e.g., drilling and soil sampling, seeding). Exposure routes include incidental ingestion of and dermal contact with soil, and inhalation of surface and subsurface dust generated by wind or during surface and subsurface

earth moving activities. Biota receptors may come in contact with MC in surface and/or subsurface soil by plant uptake of MC or incidental soil ingestion while burrowing, foraging, or nest building. Similar to humans, inhalation of MC impacted dust is possible from wind or earth moving activities. MC in soil can potentially bioaccumulate in biota that uptake MC at the site. Runoff and soil erosion to the POLB Mitigation Pond is also a potential release mechanism and is evaluated in the POLB Mitigation Pond CSM.

Groundwater

The release mechanism of leaching to groundwater is possible; however, shallow groundwater is not used for drinking water or irrigation on NAVWPNSTA Seal Beach so direct pathways to humans are considered incomplete. MC can potentially leach from soil to groundwater in the shallow alluvial aquifer; because shallow groundwater is tidally influenced and flows into the salt water marshes at the installation, there is a potentially complete pathway between MC in shallow groundwater and biota in the marshes. The deep aquifers are too deep for direct exposure to humans, plants, or animals. Furthermore, the NAVWPNSTA Seal Beach production wells are greater than 600 feet bgs.

Inhalation due to MC volatilization is evaluated to be incomplete based on the low volatility of the MC of concern (i.e., metals, explosives) and the open unconfined environment of the site.

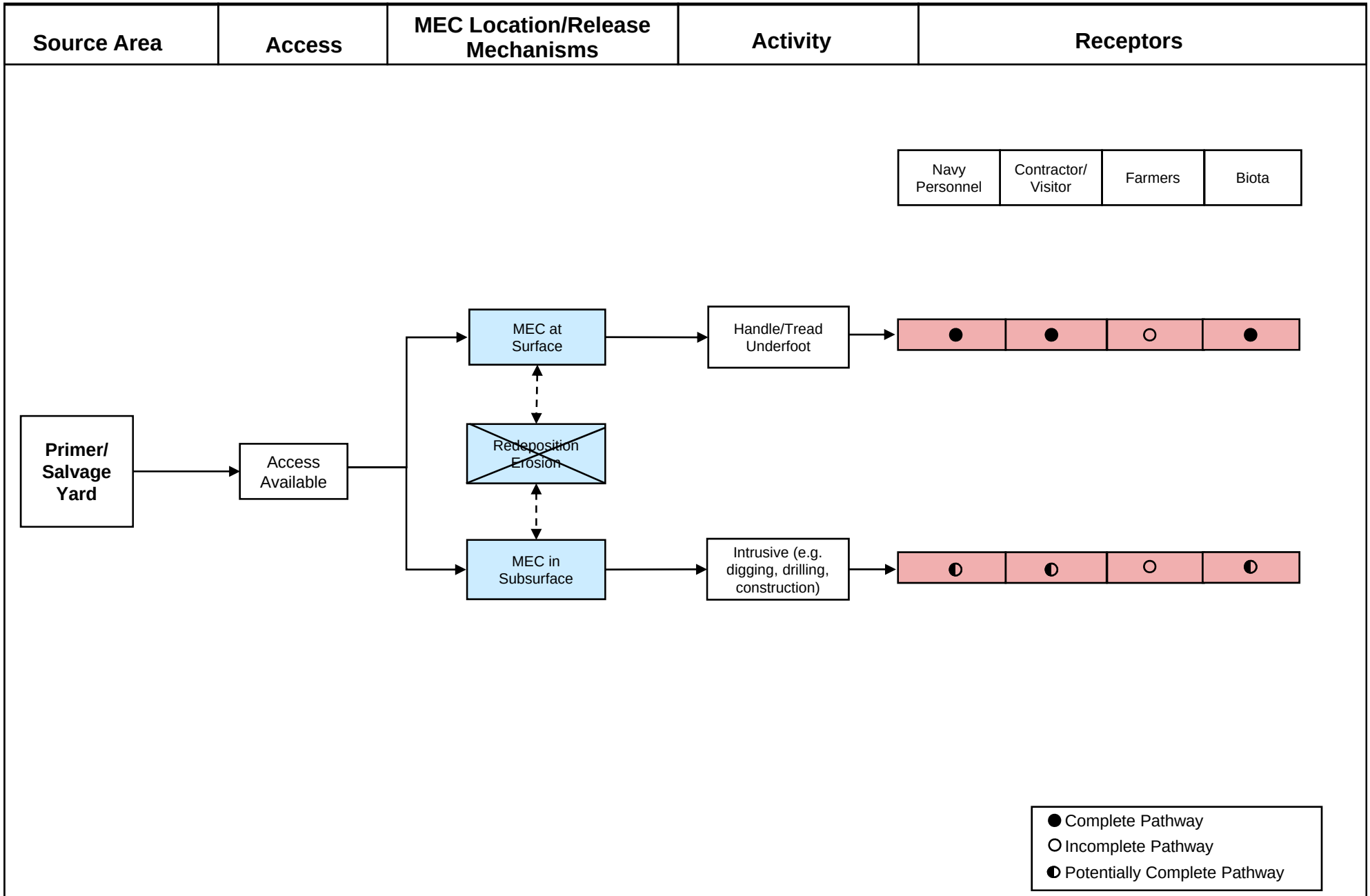

MALCOLM PIRNIE

Prepared for:

PRELIMINARY SITE INSPECTION – DRAFT FINAL PSI REPORT
PRIMER/SALVAGE YARD – MEC EXPOSURE PATHWAY ANALYSIS
NAVWPNSTN SEAL BEACH, CALIFORNIA

MALCOLM PIRNIE, INC.

Figure 5.1-11
December 2008

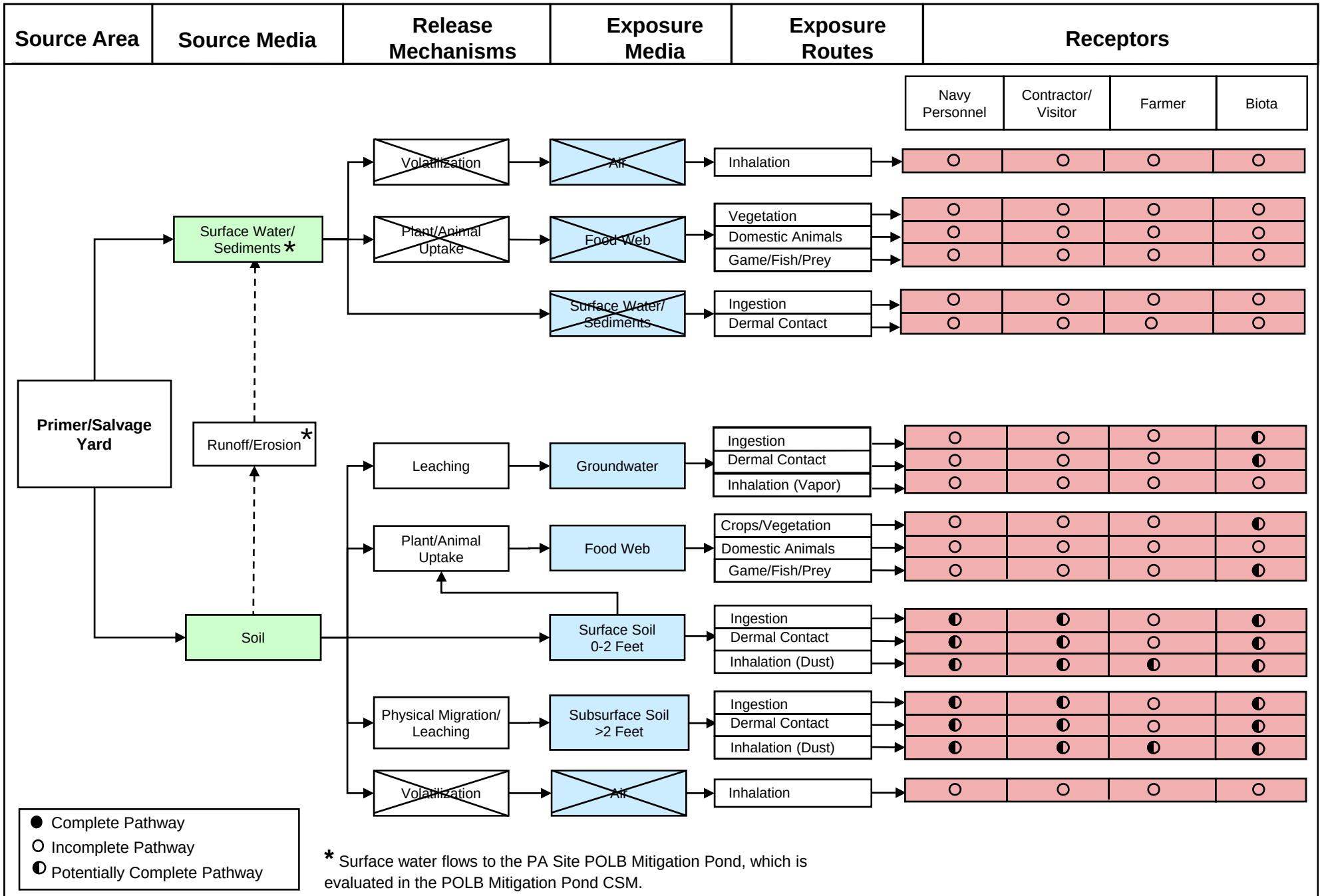

MALCOLM PIRNIE

Prepared for:

PRELIMINARY SITE INSPECTION – DRAFT FINAL PSI REPORT
PRIMER/SALVAGE YARD – MC EXPOSURE PATHWAY ANALYSIS
NAVWPNSTA SEAL BEACH, CALIFORNIA

MALCOLM PIRNIE, INC.

Figure 5.1-12
December 2008

5.1.12. Summary

The 46-acre Primer/Salvage Yard is located south of Bolsa Avenue, east of 7th Street, west of 9th Street, and north of the northern bank of the 7th Street POLB Mitigation Pond. The pond marks the southern boundary of the Primer/Salvage Yard. The northern bank of the 7th Street POLB Mitigation Pond marks Primer/Salvage Yard's southern boundary. Approximately 24 acres of the Primer/Salvage Yard site are fenced with a locked gate. The Primer/Salvage Yard and associated storage were used from 1944 through the late 1990s in conjunction with rocket segregation, inspection, and repackaging; bomb and rocket overhaul (e.g., 2.75- and 7.2-inch); and projectile (e.g., 20- to 40- mm) segregation, inspection, and repackaging. It is also reported that thousands of projector casings and damaged ammunition were stored in the Primer/Salvage Yard area (NEESA, 1985). During the site visit, MEC and munitions related items were noted inside the fenced yard. Based on historical documents, interviews, and the November 2007 site visit, the Primer/Salvage Yard is considered a known MEC area with potentially complete MEC and MC exposure pathways.

This page intentionally is blank.

Draft Final Preliminary Site Inspection
NAVWPNSTA Seal Beach, California

MALCOLM PIRNIE

Map 5.1-1
Visual Survey
Primer/Salvage Yard

Legend

Installation Boundary

MRP Sites

0 25 50 100
Meters

Data Source: NAVWPNSTA Seal Beach Aerial, GIS Data, 2007

Coordinate System: UTM, Zone 11N
Datum: NAD 83
Units: meters

Contract: N62472-02-D-1300
Edition: Draft Final Preliminary Site Inspection
Date: December 2008

This page intentionally is blank.

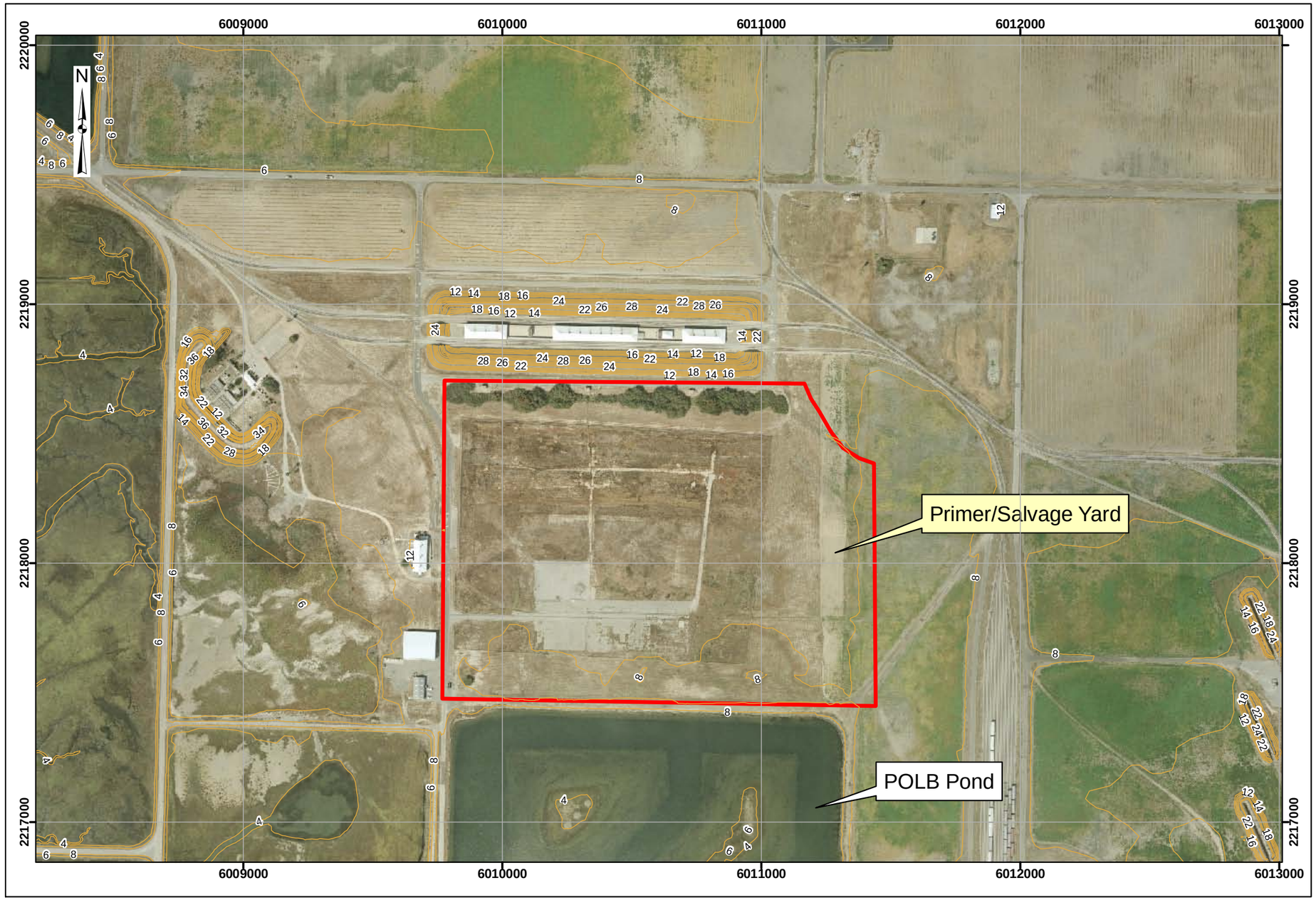

Draft Final Preliminary Site Inspection
NAVWPNSTA Seal Beach, California

MALCOLM PIRNIE

Map 5.1-2
Range/Site Details
Primer/Salvage Yard

Legend

- Installation Boundary
- MRP Sites
- Contours (2-ft interval)

0 25 50 100 Meters

Data Source: NAVWPNSTA Seal Beach Aerial, GIS Data, 2007

Coordinate System: UTM, Zone 11N
Datum: NAD 83
Units: meters

Contract: N62472-02-D-1300
Edition: Draft Final Preliminary Site Inspection
Date: December 2008

NAVWPNSTA Seal Beach, California

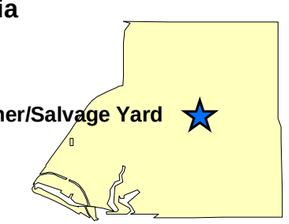

This page intentionally is blank.

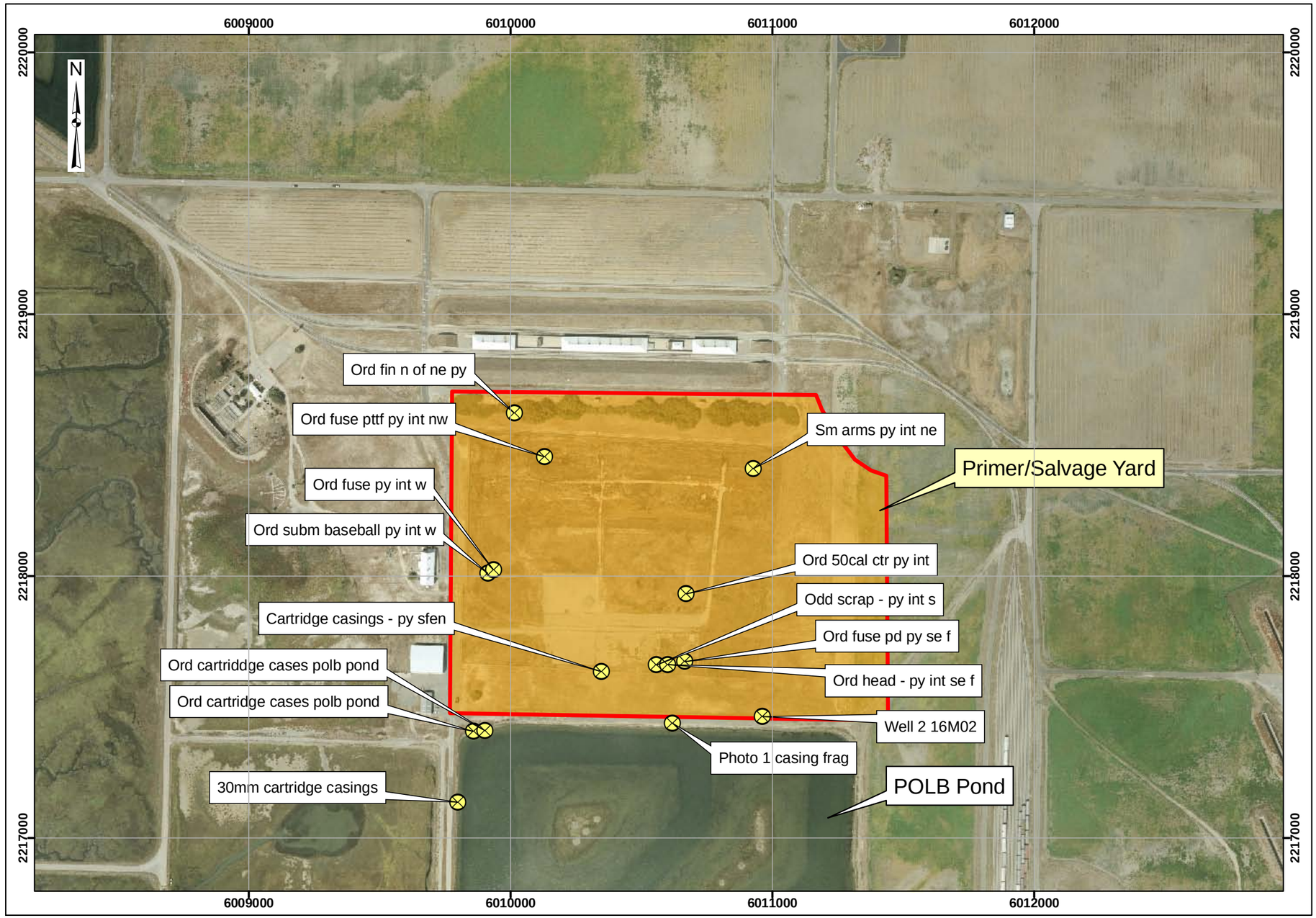

Draft Final Preliminary Site Inspection
NAVWPNSTA Seal Beach, California

MALCOLM PIRNIE

Map 5.1-3
Munitions Characterization
Primer/Salvage Yard

Legend

- Installation Boundary
- MRP Sites
- Evidence of Munitions Use

MEC Presence*

- Known
- Suspect

*MEC Presence was determined through review of historical documentation, interviews, and visual survey.

0 25 50 100 Meters

Data Source: NAVWPNSTA Seal Beach Aerial, GIS Data, 2007

Coordinate System: UTM, Zone 11N
Datum: NAD 83
Units: meters

Contract: N62472-02-D-1300
Edition: Draft Final Preliminary Site Inspection
Date: December 2008

This page intentionally is blank.

5.2. POLB Mitigation Pond

5.2.1. History and Site Description

The POLB Mitigation Pond site is located immediately south of Slough Road and is 13 acres along the north and west banks of the pond. The site extends roughly 630 feet south into the pond to encompass the former EOD and safety demonstration areas (Figure 5.2-1). The POLB Mitigation Pond has been separated from the Primer/Salvage Yard (Section 5.1) to keep aquatic and terrestrial impacts separate.

An area roughly 900 feet south of former Building 413 reportedly was used for EOD and safety demonstrations between 1944 and the 1980s. EOD personnel detonated 1 pound or less of Composition 4 (C4) explosive each time the site was used, and the safety demonstrations consisted of igniting 1 ounce or less of black powder each time to demonstrate to station personnel the explosive properties of the products they were handling (NEESA, 1985). The site is also documented to have unreported disposal of munitions similar to those reported at the Primer/Salvage Yard (e.g., live, inert, and damaged 2.75 rockets; 20- to 40-mm projectiles; grenades; black and smokeless powders; primers; fuzes; small arms ammunition) (NEESA, 1985).

Figure 5.2-1: 1965 aerial photograph showing extent of Primer/Salvage Yard and possible EOD and/or safety demonstration areas

The POLB Mitigation Pond is one of four tidally influenced wetland ponds created by the POLB in 1989/1990 as mitigation for the construction of its Pier J Landfill (POLB, 1989a). The POLB pond occupies approximately 40 acres and is tidally connected to the Seal Beach NWR and Anaheim Bay (NAVWPNSTA Seal Beach, 2007). From 1989 to 1990, soil from the POLB Mitigation Pond area was excavated to a depth of roughly 6 feet bgs to an average depth of 3 feet below sea level (Figure 5.2-2).

During the excavation of the POLB Mitigation Pond, it was reported that 3-inch rounds were seen falling out of trucks and that EOD responded to these incidents (Mr. Giorgice, Mr. Carlock, and Mr. Durham, pers. comm.). The excavated soil was used, in part, for fill in Westminster POLB Fill Area (Section 5.6). Despite soil being excavated, there is still evidence of known MEC in the northern and western banks of the POLB Mitigation Pond (Section 5.2.4) (NAVFACSW, 2007).

Previous Investigations:

Subsurface Soil Investigation, Anaheim Bay Mitigation, Case Road, Perimeter Road And Seventh Avenue Site Seal Beach, California (Earth Technology Corporation, 1989)

Before soil was removed to create the POLB wetland mitigation ponds, a subsurface investigation was conducted in 1989. Soil samples were composited from major lithologic units (silty clay, clayey silt, and silty sand) at 1.5, 3, 6, and 9 feet bgs and analyzed for metals and organic compounds. Explosives were also analyzed for metals and organic compounds. Of the 10 borings, two were in the former safety demonstration area of IRP Site 16 and eight were outside the IRP Site 16. The composite samples analyzed did not exceed state or federal hazardous waste criteria for any of the parameters analyzed.

5.2.1.1. Bathymetry

The elevation of the POLB Mitigation Pond ranges from a few feet asl at the top of its banks to 3 feet below sea level within the ponds, going to a depth of approximately 6 feet. To the south of the site boundaries, there are three islands within the POLB pond with an elevation of 3.5 feet asl. The pond is surrounded by flat terrain. Refer to Figure 5.2-2. Section 3.2 gives a general description of the topography of NAVWPNSTA Seal Beach.

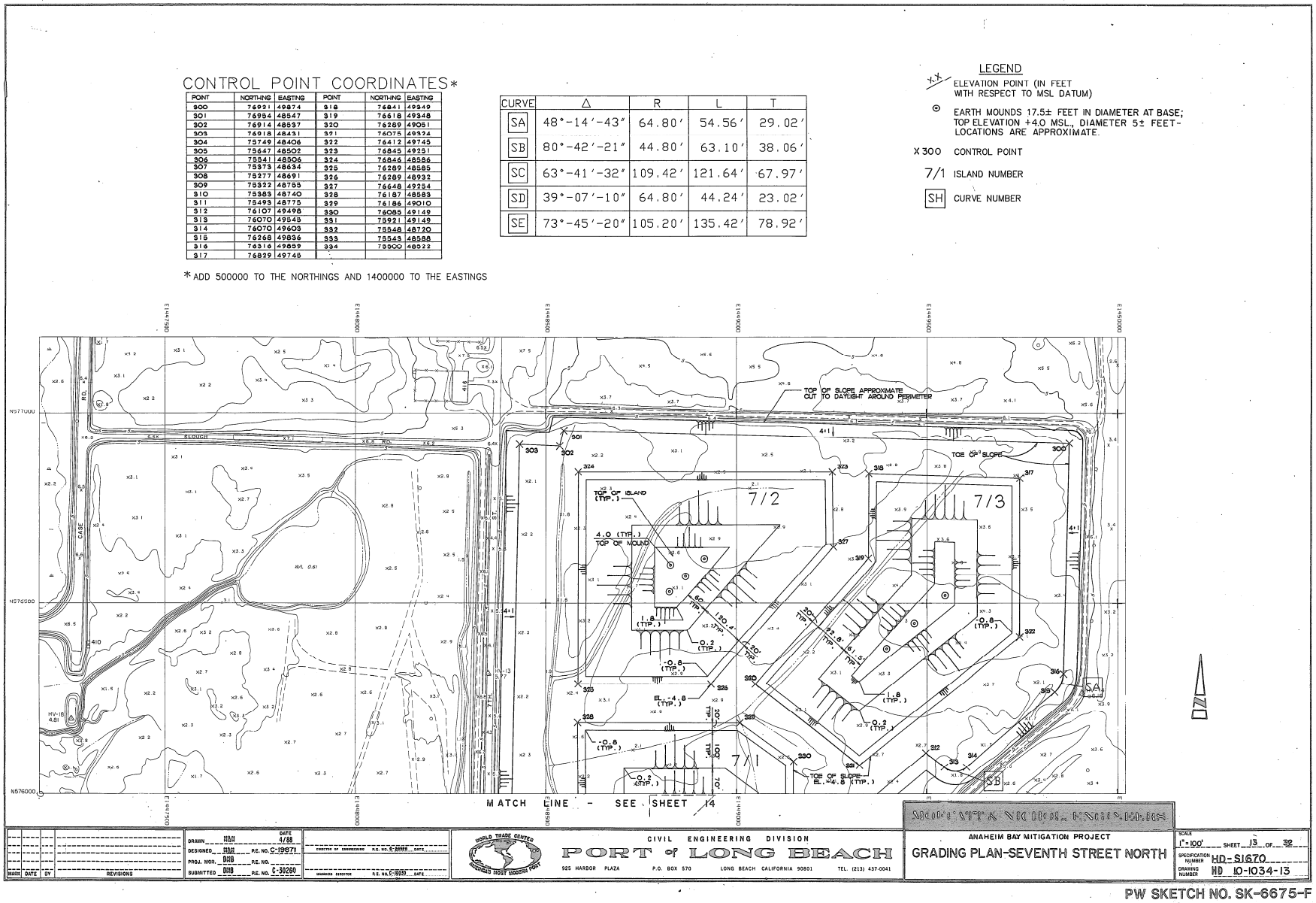

Figure 5.2-2: Grading plan for 7th Street POLB Mitigation Pond, 1988

5.2.1.2. Geology

POLB Mitigation Pond surficial geology is characterized by alluvial and coastal deposits (Qal) (NAVFACSW, 1998a). Section 3.3 provides a more detailed description of the geology of NAVWPNSTA Seal Beach.

5.2.1.3. Soil and Vegetation Types

Soil at the POLB Mitigation Pond is predominantly poorly drained clay and silt layers covered by water. The IAS and INRMP note the area to be characterized by drained Bolsa silty clay loam, which occurs on large alluvial fans and is moderately to slowly permeable (NEESA, 1985; NAVWPNSTA Seal Beach, 2007). Section 3.4 includes a general description of the soil types at NAVWPNSTA Seal Beach.

The coastal salt marsh habitat of the pond is typically dominated by cordgrass and pickleweed (*Salicornia spp*.), although the POLB Mitigation ponds have become increasingly important eelgrass habitat. (NAVWPNSTA Seal Beach, 2007). The vegetation above the banks of the POLB Mitigation Pond is characterized by non-native annual grasses (NAVFACSW, 1999; NAVWPNSTA Seal Beach, 2007). Section 3.4 includes a general description of the vegetation types at NAVWPNSTA Seal Beach.

5.2.1.4. Hydrology

Surface water at the installation generally flows southwest following the topography of the installation toward the Pacific Ocean (NAVFACSW, 2002). The POLB Mitigation Pond is tidally connected with the Seal Beach NWR, Anaheim Bay, and the Pacific Ocean. Section 3.5 provides a general description of the hydrology of NAVWPNSTA Seal Beach.

5.2.1.5. Hydrogeology

Groundwater in the vicinity of the site is 5 to 10 feet bgs and is tidally influenced. Shallow groundwater is reported to flow to the northeast. The closest reported well is Navy Well 3, roughly 1,500 feet to the north at the intersection of Bolsa Avenue and Devlin Road. The well is 680 feet deep (screened at 615 feet bgs) and currently is used for agricultural irrigation (Chris Higgins, 1984; Ms. Tamashiro, pers. comm.). Lateral groundwater movement in the moderately permeable shallow aquifer is estimated to be several hundred feet per year (NEESA, 1985). Section 3.6 provides a general description of the hydrogeology of NAVWPNSTA Seal Beach.

5.2.1.6. Cultural and Natural Resources

There are no known significant cultural resources within or adjacent to the site (NAVFACSW, 2002; COUP Incorporated, n.d.). The POLB Mitigation Pond is part of the Seal Beach NWR. The POLB Mitigation Pond is coastal wetland created to mitigate coastal wetland lost at the POLB. Section 3.7 includes a description of the cultural and natural resources of NAVWPNSTA Seal Beach.

5.2.1.7. Endangered and Special Status Species

Federally listed endangered or threatened species are documented as present in the area within the Seal Beach NWR. The species include the California brown pelican (*Passerculus sandwichensis beldingi*), California least tern (*Sterna antillarum browni*), light-footed clapper rail (*Rallus longirostris levipes*), and the western snowy plover (*Charadrius alexandrinus nivosus*) (NAVWPNSTA Seal Beach, 2007; CDFG, 2007). Additional information on species of concern for NAVWPNSTA Seal Beach is presented in Section 3.8.

5.2.2. Visual Survey Observations and Results

A visual survey of the POLB Mitigation Pond was conducted on 14 and 15 November 2007 (Figure 5.2-1 and Figure 5.2-3). During the visual survey, the following Malcolm Pirnie team members were present: Ms. Caruso (Team Leader), Mr. Schulman, Mr. Storrs (UXOSS), Ms. Gerritzen, and Mr. Asakawa. The following Navy representatives were present during the visual survey: Ms. Tamashiro and Mr. Gordon. The field team conducted the visual survey by walking the entire perimeter of the pond. During the visual survey, the data collection team observed numerous 40-mm cartridge cases sticking out of the north bank of the pond and within the pond along the north and west banks (Figure 5.2-5). The entire perimeter of the POLB Mitigation Pond was walked, and the banks and shallow portions of water were visually surveyed.

Figure 5.2-3: View the northern bank of the POLB Mitigation Pond
(Photograph was taken during the November 2007 on-site visual survey.)

Figure 5.2-4: View of the POLB Mitigation Pond from the northwest bank, facing southeast
(Photograph was taken during the November 2007 on-site visual survey.)

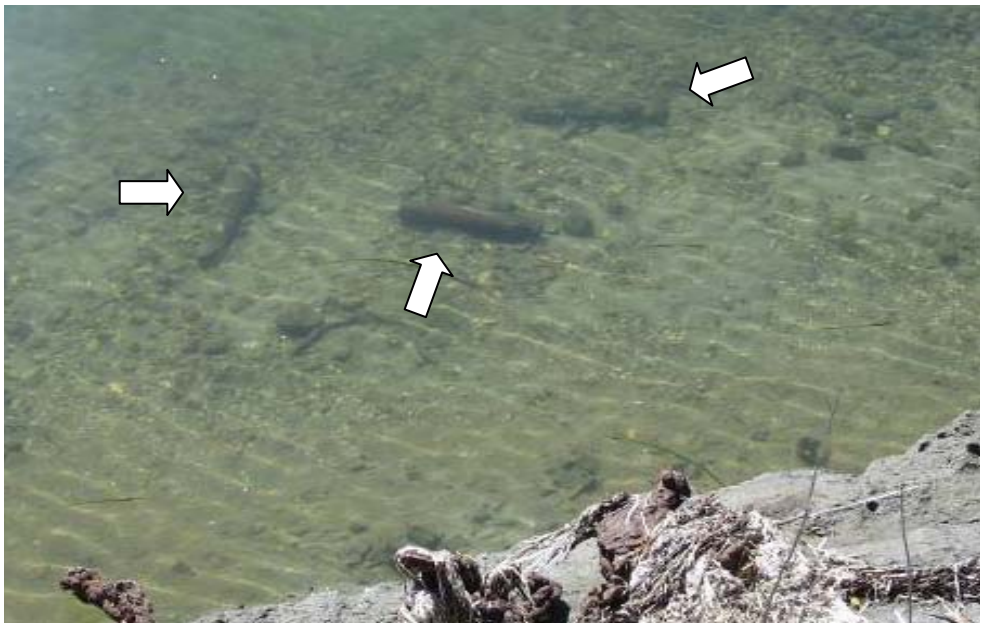

Figure 5.2-5: Three cartridge cases submerged along the northwestern bank of the POLB Mitigation Pond.
(Photograph was taken during the November 2007 on-site visual survey.)

In addition to the November 2007 visual survey, a site reconnaissance was conducted of the POLB Mitigation Pond in September 2007 as part of an Explosives Safety Inspection. During that time, a base plate with likely live primer in it and a partial 20-mm cartridge were observed (Figure 5.2-6; Figure 5.2-7).

Figure 5.2-6: View of a base plate with a live primer
(Photograph was taken during the September 2007 Explosives Safety Inspection.)

Figure 5.2-7: Partial 20-mm cartridge (Photograph was taken during September 2007 Explosives Safety Inspection.)

A visual depiction of the site reconnaissance is provided on Map 5.2-1 located at the end of Section 5.2.12. Additional site details are illustrated on Map 5.2-2, also located at the end of Section 5.2.12.

5.2.3. Munitions and Munitions Related Materials Associated with the Site

This section describes the munitions or munitions related materials known or suspected to be at the site, including the types and estimated maximum penetration depths. This includes both MEC and nonhazardous munitions related scrap.

The POLB Mitigation Pond area was used from 1944 to 1982 in association with the Primer/Salvage Yard. During safety demonstrations, EOD detonated 1 pound or less of C4 and ignited 1 ounce or less of black powder at the site (NEESA, 1985). The site is also reported to have unreported disposal of munitions similar to those reported at the Primer/Salvage Yard (e.g., live, inert, and damaged 2.75 rockets; 20- to 40-mm projectiles; grenades; black and smokeless powders; primers; fuzes; small arms ammunition) and 3-inch rounds falling off trucks (NEESA, 1985).

Based on the information obtained during the data collection process, the POLB Mitigation Pond is not known or suspected to contain CWM filled munitions, electrically fuzed munitions, or DU associated munitions.

5.2.4. MEC Presence

The entire site has been subdivided and categorized into one of three levels of MEC presence, including: known MEC areas, suspected MEC areas, and areas not expected to contain MEC. Known MEC areas are those areas where MEC were found in the past, a removal of MEC was conducted, EOD responses occurred at the site, or MEC were found during the site visit. Suspected MEC areas are those areas where no MEC have been found at the site; however, training or disposal may have occurred at the site, historical documents indicate MEC may be present, or there is the potential for MEC to be found at the site. Areas not expected to contain MEC are those where full removals have occurred or no records have been found of munitions being used at the site.

Map 5.2-3 illustrates the munitions characterization of the POLB Mitigation Pond and is provided at the end of Section 5.2.12. The MEC presence is discussed below.

5.2.4.1. Known MEC Areas

Based on historical documents, interviews, and the November 2007 site visit, the POLB Mitigation Pond site is a known MEC area. During the site visit, numerous cartridges were observed along the northern banks of the POLB Mitigation Pond. In addition, during an Explosives Safety Inspection in September 2007, a base plate with likely live primer in it and a partial 20-mm cartridge were observed (Figure 5.2-6 and Figure 5.2-7).

5.2.4.2. Suspected MEC Areas

The entire POLB Mitigation Pond site is a known MEC area.

5.2.5. Ordnance Penetration Estimates

The maximum depth of munitions would be related to burial. Soil at the site was excavated to roughly 6 feet bgs to create the POLB Mitigation Pond. MEC are present in the pond bank and on the bottom of the pond.

5.2.6. MC

Based on SI results for the Primer/Salvage Yard (Section 5.1), MC include nickel, zinc, ammonia, and TKN. Black powder (potassium nitrate) and C4 explosives (primarily RDX) were used during EOD and safety demonstrations at the POLB Mitigation Pond. Explosive MC related to cartridges likely include double base powders (nitrocellulose, nitroglycerin). MC related to the removal of primers from projectiles at the adjacent Primer/Salvage Yard include black powder and smokeless powder (nitrocellulose, nitroglycerin, and nitroguanidine). Metal MC related to black and smokeless powder include antimony, arsenic, copper, nickel, and zinc. In addition, the obscurant fog oil (kerosene/mineral oil) reportedly was spilled in the vicinity, which may include part of the POLB Mitigation Pond.

5.2.7. Contaminant Migration Routes

Migration/reposition of known MEC may occur naturally through tidal changes or surface soil erosion of the pond banks. Intrusive earth moving activities (e.g., future excavation related to maintenance/dredging of the pond) could redistribute MC or MEC to surface/subsurface soil. MC can leach from MEC and bioaccumulate in biota in water. MC can also leach from MEC to surface and/or subsurface soils. A detailed CSM of migration and exposure pathways is presented in Section 5.2.11.

5.2.8. Receptors

Human receptors include Navy personnel, contractors (including maintenance and environmental), and Navy-escorted visitors. Ecological receptors (biota) are also potential receptors.

5.2.8.1. Nearby Populations

Section 5.1.8.1 provides population information for NAVWPNSTA Seal Beach and its vicinity.

5.2.8.2. Buildings Near/Within Site

There are no structures on or adjacent to the POLB Mitigation Pond.

5.2.8.3. Utilities On/Near Site

There are no utilities on-site as the site has been excavated and is covered by water.

5.2.9. Land Use

The POLB Mitigation Pond is part of the Seal Beach NWR and provides protected habitat for migratory birds and for other endangered, threatened, and sensitive species. Because the area is a known MEC site, no intrusive maintenance is conducted at the site.

5.2.10. Access Controls/Restrictions

The POLB Mitigation Pond is located on NAVWPNSTA Seal Beach, which is a fenced and guarded installation. Security Forces personnel are responsible for maintaining law and order and for implementing access control policies and procedures. Access to the POLB Mitigation Pond from within NAVWPNSTA Seal Beach is controlled by vehicular security patrol. Limited public access is granted to Seal Beach NWR by permission only.

5.2.11. CSM

This CSM was developed following guidance documents issued by the USEPA for hazardous waste sites and the USACE for MEC sites. Guidance documents include the USEPA's *Guidance for Conducting Remedial Investigations and Feasibility Studies under CERCLA* (EPA/540/G-89/004) and the *Final USACE CSM Guidance Development of Integrated Conceptual Site Models for Environmental Ordnance and Explosives Sites* (USACE, 2003).

The CSM describes the site and its environmental setting. The CSM presents information regarding: 1) MEC and/or MC known or suspected to be at the site; 2) current and future reasonably anticipated or proposed uses of the real property; and 3) actual, potentially complete, or incomplete exposure pathways linking them. The CSM is the basis for the prioritization and remediation cost estimate.

The CSM is presented in a series of information profiles that provide information about the site. The information profiles are included in Table 5.2-1.

Table 5.2-1: CSM Information Profiles – Port of Long Beach Mitigation Pond

Profile Type	Information Needs	PSI Findings
Range/Site Profile	Installation Name	NAVWPNSTA Seal Beach
	Installation Location	NAVWPNSTA Seal Beach is located in the city of Seal Beach in Orange County, California, approximately 26 miles south of the Los Angeles urban center and 8 miles east of Long Beach.
	Range/Site Name	POLB Mitigation Pond
	Range/Site Location	The POLB Mitigation Pond site is situated south of Slough Road and roughly 1,200 feet to the west of the Marshalling Yard. The site extends from the edge of the northern bank of the pond 630 feet south of the total POLB Mitigation Pond.
	Range/Site History	The POLB Mitigation Pond area was used from 1944 through 1982 in association with the Primer/Salvage Yard. The pond was completed in 1990. Prior to the pond's creation, an area roughly 600 feet south of former Building 413 reportedly was used for EOD and safety demonstrations at an unknown frequency. EOD detonated 1 pound or less of C4 explosive each time the site was used, and the safety demonstrations consisted of igniting 1 ounce or less of black powder each time to demonstrate to station personnel the explosive properties of the product they were handling (NEESA, 1985). The site is also reported to have unreported disposal of munitions similar to those reported at the Primer/Salvage Yard (e.g., live, inert, and damaged 2.75-inch rockets; 20- to 40-mm projectiles; grenades; black and smokeless powders; primers; fuzes; small arms ammunition) (NEESA, 1985).
	Range/Site Area and Layout	The POLB Mitigation Pond occupies 40 acres. The POLB Mitigation Pond site is approximately 13 acres.

Table 5.2-1: CSM Information Profiles – Port of Long Beach Mitigation Pond		
Profile Type	**Information Needs**	**PSI Findings**
	Range/Site Structures	There are no structures on or adjacent to the POLB Mitigation Pond.
	Range/Site Boundaries	Map 2.1-1 shows the location of the site. N: Slough Road (unpaved) borders the northern bank of the mitigation pond, beyond which is the Primer/Salvage Yard. The installation boundary is roughly 2 miles away and bordered by the city of Seal Beach. S: The POLB Mitigation Pond surface continues to the south of the defined site boundary. Beyond the POLB Mitigation Pond are IRP Sites 6 (Explosives Burning Ground) and 7 (Station Landfill). The installation boundary is located roughly 0.6 miles to the south. Beyond the installation boundary is the Orange County Flood Control Channel, which flows into Anaheim Bay and then the Pacific Ocean, and the city of the Huntington Beach. W: 7th Street and graded land with annual grasses extend west for 0.25 miles, beyond which is the Seal Beach NWR. The installation boundary is roughly 1.75 miles to the west, where the installation is bordered by the city of Seal Beach. E: Low grasses, railroad sidings, agricultural fields, and undeveloped land extend to the east. The Marshalling Yard is roughly 500 feet to the east. The installation boundary is roughly 1 mile away, where the installation is bordered by the cities of Westminster and Huntington Beach.
	Range/Site Security	The POLB Mitigation Pond is located on NAVWPNSTA Seal Beach, which is a fenced and guarded installation. Security Forces personnel are responsible for maintaining law and order and for implementing access control policies and procedures. Access to the POLB Mitigation Pond from within NAVWPNSTA Seal Beach is controlled by vehicular security patrol. Limited public access is granted to the Seal Beach NWR by permission only.
Munitions/ Release Profile	Munitions Types	Numerous cartridges and a base plate with live primer have been observed lying within or along the northern bank of the pond. Munitions potentially present also include munitions attributed to the adjacent Primer/Salvage Yard (e.g., inert and/or damaged rockets, grenades, submunitions).
	Maximum Probability Penetration Depth	The maximum depth of munitions would be related to burial. Soil at the site was excavated to roughly 6 feet bgs to create the POLB Mitigation Pond. Munitions debris is still emerging from the banks, indicating that additional MEC are present at the site below the water/ground surface.

Table 5.2-1: CSM Information Profiles – Port of Long Beach Mitigation Pond		
Profile Type	**Information Needs**	**PSI Findings**
	MEC Density	Based on observed items potentially related to discarded or buried MEC during the site visit, the density of MEC potentially varies over the site and is estimated to range from very low (one to two items per acre) to high (greater than 40 items per acre).
	MEC Scrap/Fragments	Numerous empty 40-mm cartridge casings were observed lying within and along the northern bank of the pond during the site visit. In addition, a primer plate and 20-mm cartridge casings have been reported at the site.
	Associated MC	Based on SI results for the Primer/Salvage Yard, MC include nickel, zinc, ammonia, and TKN. Black powder (potassium nitrate) and C4 explosives (RDX) reportedly were also used during EOD and safety demonstrations at the POLB Mitigation Pond. Explosive MC related to cartridges likely include double base powders (nitrocellulose, nitroglycerin). MC related to the removal of primers from projectiles at the adjacent Primer/Salvage Yard include black powder and smokeless powder (nitrocellulose, nitroglycerin, and nitroguanidine). Metal MC related to black and smokeless powder include antimony, arsenic, copper, nickel, and zinc. In addition, the obscurant fog oil (kerosene/mineral oil) reportedly was spilled in the vicinity, which may include part of the POLB Mitigation Pond.
	Migration Routes / Release Mechanisms	Migration/reposition of known MEC may occur naturally through tidal changes or surface soil erosion of the pond banks. Intrusive earth moving activities (e.g., future excavation related to maintenance/dredging of the pond) could redistribute MC or MEC to surface/subsurface soil. MC can leach from MEC and bioaccumulate in biota in water. MC can also leach from MEC to surface and/or subsurface soils.
Physical Profile	Climate	The climate at NAVWPNSTA Seal Beach is typical of the maritime subclimate within the prevailing California Mediterranean climate: mild winters, cool summers, high relative humidity, and frequent early morning clouds that lead to afternoon sunshine. The annual average temperature is 74°F. Summer average high temperatures range from 77°F to 84°F, and average lows range from 60°F to 65°F. Winters tend to be moderate, with highs typically 67°F and average lows ranging from 45°F to 47°F. Yearly precipitation averages 13 inches per year; February is the wettest month, averaging 3 inches per year, and July is the driest, averaging 0.02 inches per year (WRCC, n.d.). Periodically, the region will experience *El Niño* conditions, which tend to bring

Table 5.2-1: CSM Information Profiles – Port of Long Beach Mitigation Pond		
Profile Type	**Information Needs**	**PSI Findings**
		wetter winters to the area through heavy storms. The prevailing winds are westerly with an average velocity of 10 knots; occasionally, strong dry northeasterly winds descend the mountain slopes in the fall, winter, and early spring months (NAVFACSW, 1979). The strongest winds that occur for the region are associated with the winter and spring storms off the Pacific Ocean (NAVFACSW, 2005).
	Bathymetry	The POLB Mitigation Pond is an artificial pond dug to a depth of 6 feet with three islands. The elevation of the POLB Mitigation Pond ranges from 3.5 feet asl to roughly 3 feet below sea level within the ponds. The pond is surrounded by flat terrain.
	Geology	POLB Mitigation Pond surficial geology is characterized by alluvial and coastal deposits (Qal) (NAVFACSW, 1998a).
	Soil	Soil at the POLB Mitigation Pond is predominantly clay and silt layers. The IAS and INRMP note the area to be characterized by drained Bolsa silty clay loam, which occurs on large alluvial fans and is moderately to slowly permeable with slow runoff and slight erosion hazard over bare level soil (NEESA, 1985; NAVWPNSTA Seal Beach, 2007). The soil is moderately alkaline and calcareous to a depth of about 49 inches (NEESA, 1985).
	Hydrogeology	Groundwater in the vicinity is 5 to 10 feet bgs and is tidally influenced. Shallow groundwater is reported to flow to the northeast. Because of salt-water intrusion, groundwater at the site is saline to brackish and is not used for drinking water (NAVFACSW, 2002). The closest reported well is Navy Well 3, roughly 1,500 feet to the north at the intersection of Bolsa Avenue and Devlin Road. The well is 680 feet deep (screened at 615 feet bgs) and currently is used for agricultural irrigation (Chris Higgins, 1984; Ms. Tamashiro, pers. comm.). There are two monitoring wells located north of Slough Road. Lateral groundwater movement in the moderately permeable shallow aquifer is estimated to be several hundred feet per year (NEESA, 1985).
	Hydrology	Surface water on the site flows generally southwest following the topography of the installation toward the Pacific Ocean (NAVFACSW, 2002). The POLB Mitigation Pond is tidally connected with the Seal Beach NWR, Anaheim Bay, and the Pacific Ocean to the south.

Table 5.2-1: CSM Information Profiles – Port of Long Beach Mitigation Pond		
Profile Type	**Information Needs**	**PSI Findings**
	Vegetation	The POLB Mitigation Pond is primarily coastal salt marsh habitat that is typically dominated by cordgrass (*Spartina spp.*) and pickleweed (*Salicornia spp.*), although the POLB Mitigation ponds have become increasingly important eelgrass (*Zostera marina*) habitat. (NAVWPNSTA Seal Beach, 2007). The vegetation above the banks of the POLB Mitigation Pond is characterized by non-native annual grasses (NAVFACSW, 1999; NAVWPNSTA Seal Beach, 2007).
Land Use and Exposure Profile	Current Land Use	The POLB Mitigation Pond is part of the Seal Beach NWR and provides protected habitat for migratory birds and for other endangered, threatened, and sensitive species. Because the area is a known MEC site, no intrusive maintenance is conducted at the site.
	Current Human Receptors	Current human receptors include Navy personnel and contractors, Navy-escorted visitors, and environmental and ecological researchers. Limited public access is granted to the wildlife refuge.
	Current Activities (frequency, nature of activity)	Known current activities include site visits to conduct environmental and ecological surveys and research. Historically, rowboats have been used infrequently in the pond for ecological research (e.g., species counting).
	Potential Future Land Use	Future land uses are expected to be the same as current uses.
	Potential Future Human Receptors	Future receptors are expected to be the same as current receptors.
	Potential Future Land Use Related Activities	Future land use activities are expected to be the same as current uses. Additional potential activities include environmental work (e.g., field research surveys, soil sampling) and construction related to maintenance/dredging of the pond.
	Zoning / Land Use Restrictions	The POLB Mitigation Pond is federally protected within the Seal Beach NWR.
	Demographics/ Zoning	NAVWPNSTA Seal Beach has a combined workforce of 150 military personnel and 600 civilian personnel. Population data for the vicinity include the following (U.S. Census, 2000): • City of Seal Beach: : 24,154 • City of Westminster: 88,207

Table 5.2-1: CSM Information Profiles – Port of Long Beach Mitigation Pond		
Profile Type	**Information Needs**	**PSI Findings**
		• City of Huntington Beach: 189,594 • Orange County: 2,846,289
	Beneficial Resources	The POLB Mitigation Pond is a tidally influenced wetland with islands that provides protected habitat for migratory birds and for other endangered, threatened, and sensitive species (NAVWPNSTA Seal Beach, 2007).
Ecological Profile	Habitat Type	Coastal salt marsh
	Degree of Disturbance	The site is part of the Seal Beach NWR and is undisturbed. Environmental research is the only known activity at the site and is low-impact based on the nature of the work.
	Ecological Receptors and Species of Special Concern	Reported mammals at the installation include various species of pocket gophers, voles, shrews, and ground squirrels, Audubon's cottontail rabbit (*Sylvilagus audubonii*) and brush rabbit (*Sylvilagus bachmani*). Nineteen species of raptors are known to occur on NAVWPNSTA Seal Beach, nine of which nest on the station: red-tailed hawk (*Buteo jamaicensis*), Swainson's hawk (*Buteo swainsoni*), great-horned owl (*Bubo virginianus*), burrowing owl (*Athene cunicularia*), loggerhead shrike (*Lanius ludovicianus*), American kestrel (*Falco sparverius*), great blue heron (*Ardea herodias*), common raven (*Corvus corax*), and American crow (*Corvus brachyrhynchos*). The avian wildlife using the installation forages over a large area and would spend relatively little time on site. Aquatic ecological receptors include marine invertebrates and fish, such as the federally endangered tidewater goby (*Eucyclogobius newberryi*), which inhabit the POLB Mitigation Pond and Anaheim Bay (NAVFACSW, 2005; NAVWPNSTA Seal Beach, 2007). Resident or migrants bird species listed by federal or state agencies, or both, as threatened or endangered include the following: • Belding's savannah sparrow (*Passerculus sandwichensis beldingi*) • California brown pelican (*Pelecanus occidentalis californicus*) • California least tern (*Sterna antillarum browni*) • Light-footed clapper rail (*Rallus longirostris levipes*) • Western snowy plover (*Charadrius alexandrinus nivosus*)

Table 5.2-1: CSM Information Profiles – Port of Long Beach Mitigation Pond		
Profile Type	**Information Needs**	**PSI Findings**
		The breeding season for these shorebird and salt marsh species extends from approximately late January to mid-September. The California least tern occupies the Seal Beach NWR only during the breeding season with most of its food supply coming from the Seal Beach NWR during that period (NAVFACSW, 2005).
	Relationship of MEC/MC Sources to Habitat and Potential Receptors	Ecological receptors may come into direct contact with MEC or MC in soil, sediment, or surface water while foraging, burrowing, bathing, or drinking. Ecological receptors coming into contact with MEC and thereby creating an explosive hazard is unlikely, but should be considered where threatened and/or endangered species may be present. Receptors may be exposed to MC that have been incorporated into the food chain (e.g., bioaccumulated in plants and animals). Protected species (e.g., the light-footed clapper rail) are known to nest near the site and may consume fish that have taken up MC. Various mammals and other animals that inhabit the area may come into contact with MC while foraging and consuming plants that have incorporated MC.

A key element of the CSM is the exposure pathway analysis, which brings together the information profiles about site conditions, MEC/MC status, and possible receptors into a complete picture. The exposure pathway analysis is critical for the CSM because it helps establish the hypothesis of the site and determines the potential course that MEC and/or MC take from a source to a receptor. Recommendations for the site are then based on the exposure pathway analysis, ranging from no further action to an SI.

For MEC, a complete or potentially complete exposure pathway must include the following components: 1) a source (e.g., locations where MEC are expected to be found); 2) access (e.g., controlled or uncontrolled access, items on the surface or within the subsurface); 3) an activity (e.g., nonintrusive grounds maintenance, intrusive construction); and 4) receptors (e.g., Navy personnel, construction workers, recreational users, authorized visitors). It is important to recognize that environmental mechanisms (e.g., erosion) and/or human intervention may result in the repositioning of MEC.

For MC, a complete or potentially complete exposure pathway must include the following components: 1) a source (e.g., locations where MC are expected to be found); 2) an exposure

medium (e.g., surface soil); 3) an exposure route (e.g., dermal contact); and 4) receptors (e.g., Navy personnel, construction workers, recreational users, authorized visitors). If the point of exposure is not at the same location as the source, the pathway may also include a release mechanism (e.g., erosion) and a transport medium (e.g., surface water).

The potential interactions between the source and receptors are assessed differently for MEC and MC. For MEC, interaction between the potential receptors and an MEC source has two components. The receptor must have access to the source and must engage in some activity that results in contact with individual MEC items within the source area. For MC, interaction between the source and receptors involves a release mechanism for the MC, an exposure medium that contains the MC, and an exposure route that places the receptor into contact with the contaminated medium.

A graphical illustration of the details of the CSM is included in Figure 5.2-8 and Figure 5.2-9.

MEC Interactions and Pathway Analysis

The exposure pathway analysis for MEC presents the exposure pathways based on historical and visual evidence that indicate the presence of MEC at the POLB Mitigation Pond.

Access to the POLB Mitigation Pond is granted to Navy personnel and contractors with access to the station. The pond is part of the Seal Beach NWR, and public visitors (e.g., birders, ecological researchers) occasionally visit the pond. The presence of human and biota receptors on-site results in the potential for complete surface MEC exposure pathways via handling or treading underfoot. Subsurface MEC exposure pathways are complete for human and biota receptors at the site from intrusive activities (e.g., dredging and construction for human receptors, burrowing for biota receptors). Ecological receptors coming into contact with MEC and thereby creating an explosive hazard is unlikely, but should be considered where threatened and/or endangered species may be present.

MC Interactions and Pathway Analysis

Potential receptors include both humans and biota that may be exposed to MC in the source medium. For MC, there is a potential release mechanism for MC (e.g., physical migration, uptake into the food web), an exposure medium containing the MC (e.g., surface water, soil), and a potential exposure route (e.g., incidental ingestion, dermal contact) that places the receptor into contact with the contaminated medium. Pathways for surface water / sediment and for soil are discussed below.

Surface Water / Sediment

Human receptors may incidentally ingest sediment or have dermal contact with MC in surface water during environmental or ecological site investigations (e.g., fish or benthic animal surveys) or from potential future land use changes that may require construction (e.g., repair of the pond, enhancement of the islands). Although the POLB Mitigation Pond is tidally connected to Anaheim Bay and the Pacific Ocean, pathways are evaluated to be incomplete due to dilution. Ecological receptors may have dermal contact or ingest surface water and sediment through the medium in which they live or while nesting or feeding. MC in surface water / sediment may bioaccumulate in biota that uptake MC at the site.

Soil

Release mechanisms for MC in soil (i.e., the pond banks) with potentially complete pathways include runoff and soil erosion (see surface water / sediment pathway analysis above), plant and animal uptake, physical migration, and leaching to subsurface soil. Human receptors may come in contact with MC in surface and/or subsurface soil during environmental work (e.g., analytical sampling, field surveys). Exposure routes include ingestion of and dermal contact with soil. The inhalation of dust is not an exposure route as soil at the site is either saturated or below the water surface. Biota receptors may come in contact with MC in surface and/or subsurface soil by plant uptake of MC or through dermal contact or incidental soil ingestion while burrowing, foraging, or nest building. MC in soil may also bioaccumulate in biota that uptake MC at the site.

Groundwater

Groundwater is hydraulically connected to the surface waters in the POLB Mitigation Pond, although shallow groundwater is not used in the site vicinity for drinking water or agricultural irrigation and direct pathways to humans are evaluated to be incomplete. MC can potentially leach from soil to groundwater in the shallow alluvial aquifer; because shallow groundwater is tidally influenced and flows into the salt water marshes at the installation, there is a potentially complete pathway between MC in shallow groundwater and biota in the marshes. The deep aquifers at the installation are too deep for direct exposure by humans, plants, or animals. Also, NAVWPNSTA Seal Beach production wells are greater than 600 feet bgs.

Inhalation due to MC volatilization for all source media is evaluated to be incomplete based on the low volatility of the MC of concern (i.e., metals, explosives) and the open unconfined environment of the site.

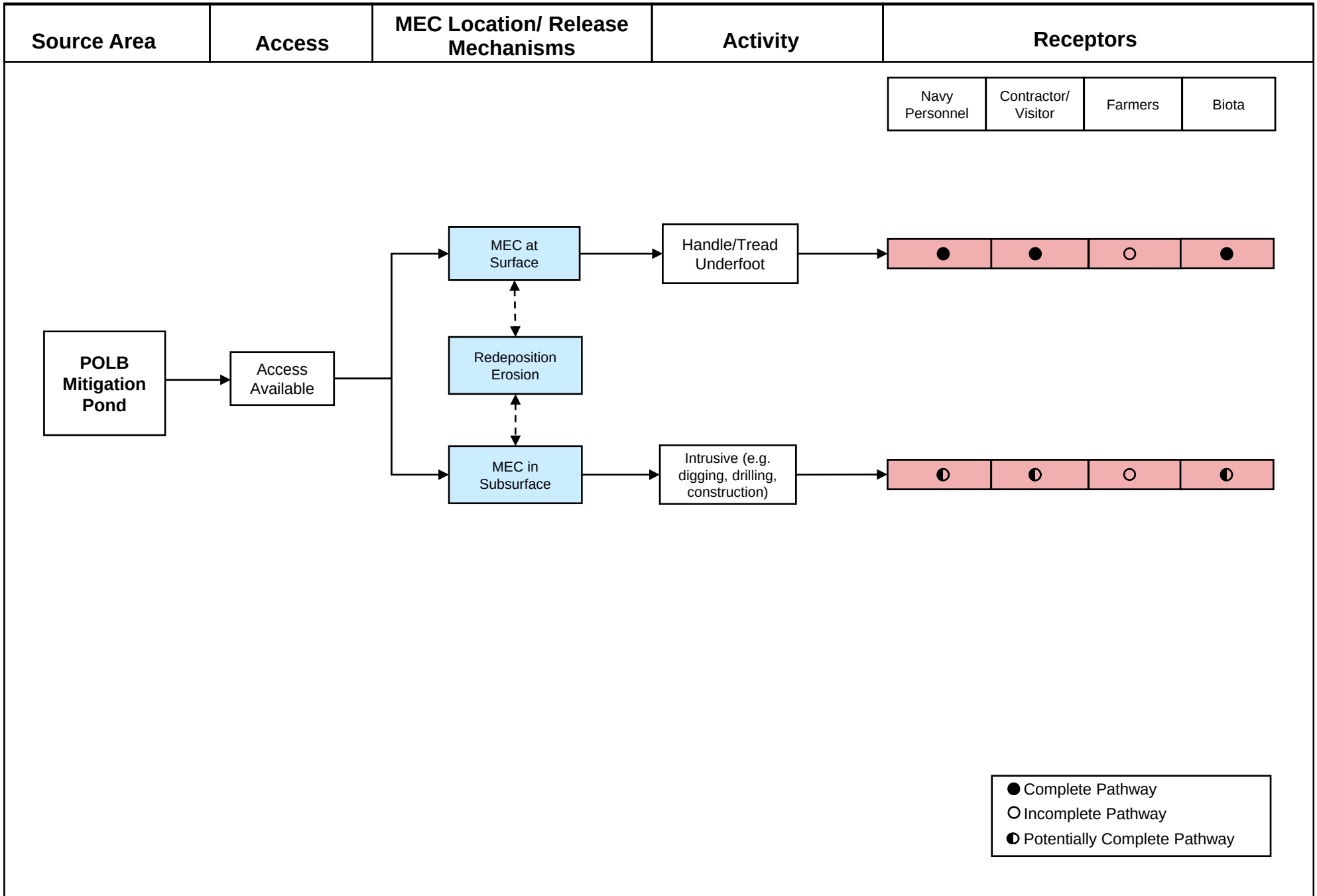

MALCOLM PIRNIE

Prepared for:

PRELIMINARY SITE INSPECTION – DRAFT FINAL PSI REPORT
POLB MITIGATION POND – MEC EXPOSURE PATHWAY ANALYSIS
NAVWPNSTN SEAL BEACH, CALIFORNIA

MALCOLM PIRNIE, INC.

Figure 5.2-8
December 2008

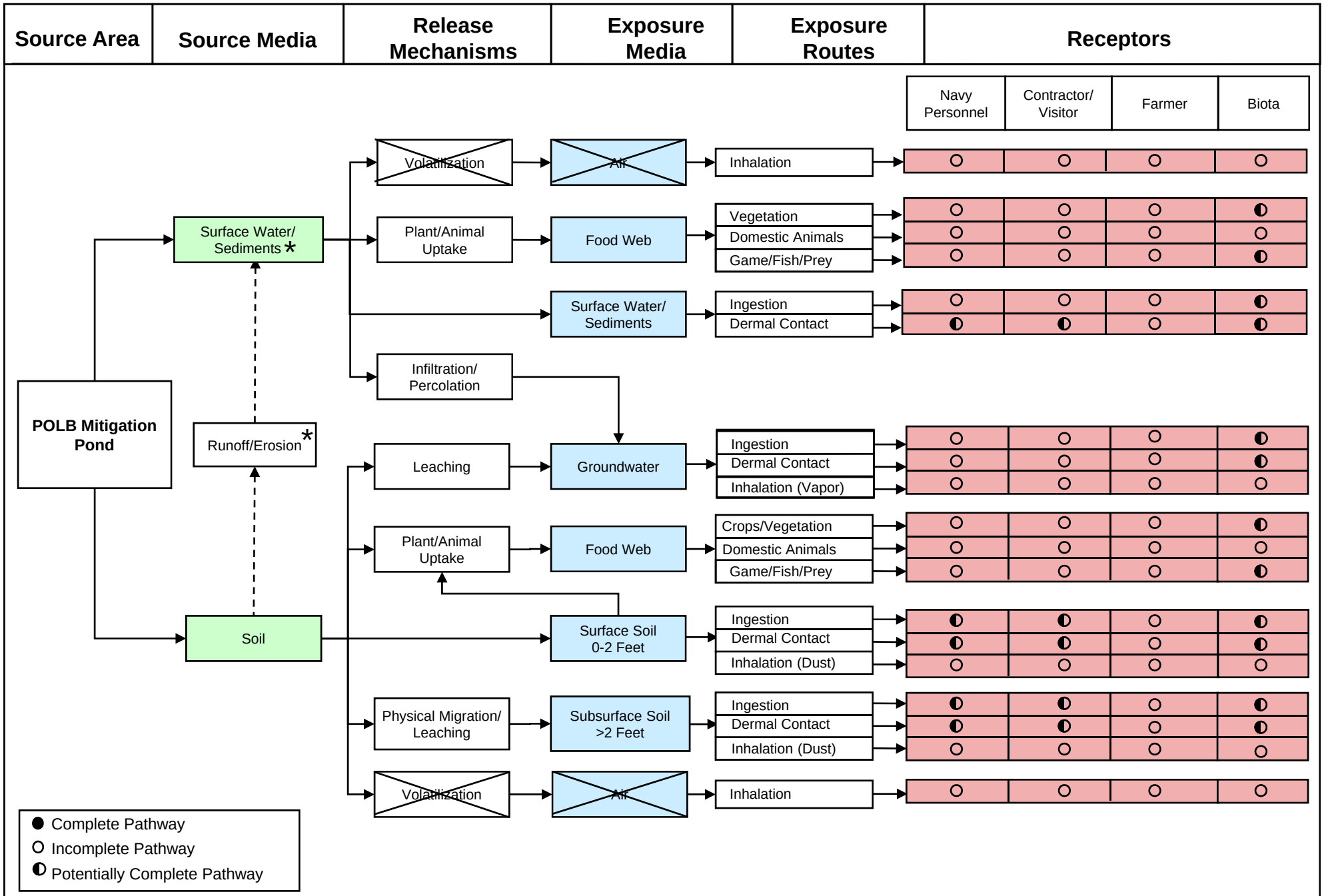

MALCOLM PIRNIE

Prepared for:

PRELIMINARY SITE INSPECTION – DRAFT FINAL PSI REPORT
POLB MITIGATION POND – MC EXPOSURE PATHWAY ANALYSIS
NAVWPNSTA SEAL BEACH, CALIFORNIA

MALCOLM PIRNIE, INC.

Figure 5.2-9
December 2008

5.2.12. Summary

The POLB Mitigation Pond is one of four tidally influenced wetland ponds created by the POLB in 1989/1990. The POLB Mitigation Pond site is located immediately south of Slough Road; it covers approximately 13 acres and extends roughly 630 feet south into the pond. The POLB Mitigation Pond area was used from 1944 to 1982 in association with the Primer/Salvage Yard. Prior to the pond's creation, the site reportedly was used as an EOD demonstration area and a safety demonstration area at an unknown frequency. EOD detonated 1 pound or less of C4 explosive each time the site was used, and the safety demonstrations consisted of igniting 1 ounce or less of black powder each time to demonstrate to station personnel the explosive properties of the product they were handling (NEESA, 1985). The site is also suspected to have unreported disposal of munitions similar to those reported at the Primer/Salvage Yard (e.g., live, inert, and damaged 2.75-inch rockets; 20- to 40-mm projectiles; grenades; black and smokeless powders; primers; fuzes; small arms ammunition) (NEESA, 1985). The POLB Mitigation Pond is considered a known MEC area with complete MEC exposure pathways and potentially complete MC pathways.

Draft Final Preliminary Site Inspection
NAVWPNSTA Seal Beach, California

MALCOLM PIRNIE

Map 5.2-1
Visual Survey
POLB Mitigation Pond

Legend

- Installation Boundary
- MRP Sites
- Site Reconnaissance

0 35 70 140 Meters

Data Source: NAVWPNSTA Seal Beach Aerial, GIS Data, 2007

Coordinate System: UTM, Zone 11N
Datum: NAD 83
Units: meters

Contract: N62472-02-D-1300
Edition: Draft Final Preliminary Site Inspection
Date: December 2008

This page intentionally is blank.

Draft Final Preliminary Site Inspection
NAVWPNSTA Seal Beach, California

Map 5.2-2
Range/Site Details
POLB Mitigation Pond

Legend

- Installation Boundary
- MRP Sites
- Contours (2-ft interval)

0 35 70 140 Meters

Data Source: NAVWPNSTA Seal Beach Aerial, GIS Data, 2007

Coordinate System: UTM, Zone 11N
Datum: NAD 83
Units: meters

Contract: N62472-02-D-1300
Edition: Draft Final Preliminary Site Inspection
Date: December 2008

NAVWPNSTA Seal Beach, California

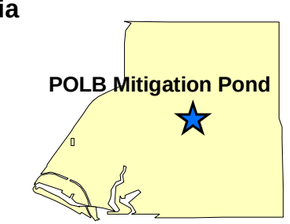

This page intentionally is blank.

Draft Final Preliminary Site Inspection
NAVWPNSTA Seal Beach, California

MALCOLM PIRNIE

Map 5.2-3
Munitions Characterization
POLB Mitigation Pond

Legend

- Installation Boundary
- MRP Sites
- Evidence of Munitions Use

MEC Presence*

- Known
- Suspect

*MEC Presence was determined through review of historical documentation, interviews, and visual survey.

0 35 70 140 Meters

Data Source: NAVWPNSTA Seal Beach Aerial, GIS Data, 2007

Coordinate System: UTM, Zone 11N
Datum: NAD 83
Units: meters

Contract: N62472-02-D-1300
Edition: Draft Final Preliminary Site Inspection
Date: December 2008

This page intentionally is blank.

5.3. Buildings 101-102 Evaporation Ponds

5.3.1. History and Site Description

The Buildings 101-102 Evaporation Ponds are located south of Westminster Street at 8th Street (Map 2.1-1). The site is comprised of unlined evaporation ponds used to dispose of wash water with Explosive D associated with Buildings 98 (Explosive D steam out building) and Buildings 101-102 (vacuum dust removal and ammunition rework buildings). Ancillary buildings also included Building 99 (which housed a generator), Building 103 (used for paint/flammable storage), and Building 104 (a small magazine). The complex operated from 1945 through the mid-1950s, in 1962, and in 1971 for demilitarizing 5-inch projectiles. When the projectiles were retired, Explosive D (ammonium picrate) was drilled out of the casing. The initial drill out procedure did not remove all of the Explosive D from the casing, and the remaining portion was removed by rinsing with warm water and steam. During peak production periods (1945 to 1947 and 1953 to 1955), an estimated average of 250 5-inch projectiles were drilled out each working day (NEESA, 1985; NEESA, 1990).

The wash water with Explosive D was generated during final steam and warm water washout of projectile casings and was discharged for primary settling and cooling from a tank in Building 98 into 10-foot-by-10-foot baffled concrete basins located on the south side of the building (IRP Site 36). Based on a 1958 engineering diagram (Figure 5.3-1), there were originally four 2.5-foot-deep concrete basins with a concrete floor in a two-by-two matrix configuration. In the late 1950s, the two northern concrete basins were filled with compacted earth and capped with a concrete slab during an expansion of the southern portion of Building 98. Building 98 also had a 4-foot-square by 5-foot-deep pit on the west side of the building that was used for an unknown purpose until it was earth-filled when Building 98 was expanded (Additions to Explosive D Stream Out Shed, Bldg 98, 1958).

Once through the concrete primary settling basins, the wash water with Explosive D drained through a 2-foot-deep, 150-foot-long concrete trench flush with grade into a series of three connected evaporation ponds, totaling 2.3 acres (IRP Site 2). The ponds are connected by six-inch diameter pipes (NEESA, 1985; NAVFACSW, 1990). From 1945 to the mid-1950s, 13 tons of Explosive D mixed with wash water drained into the IRP Site 2 ponds for evaporation and settling. In 1962, an additional 32 tons of Explosive D were drained into the ponds; in 1971, 5 pounds were drained into the ponds. The ponds occasionally were allowed to dry via draining and evaporation and then burned to control the surface accumulation of Explosive D.

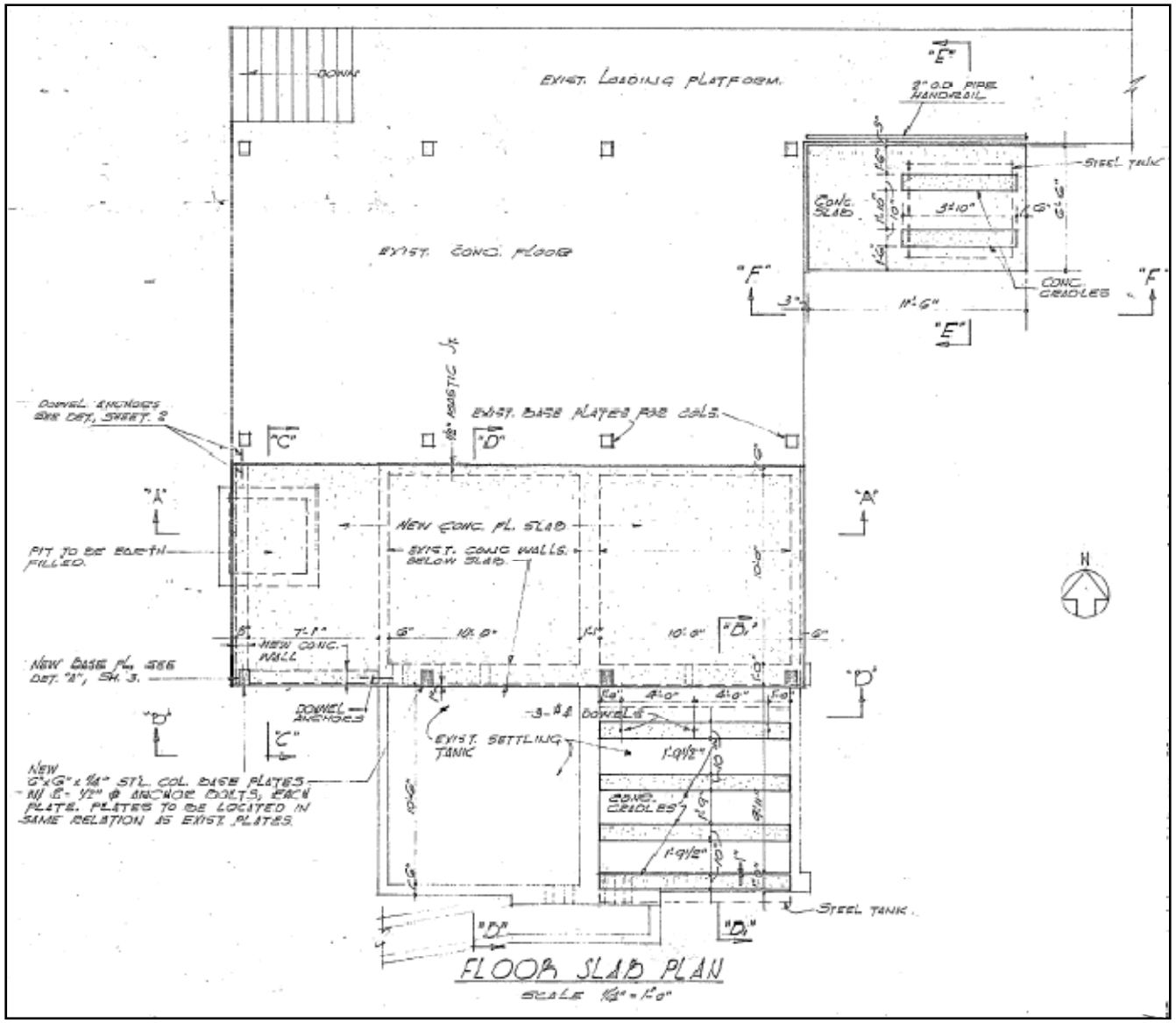

Figure 5.3-1. 1958 Engineering Diagram Showing Concrete Basins at Building 98

Post-treatment of the ponds consisted only of the controlled burns conducted while the ponds were in operation. It is reported that in 1948 the ponds were detonated rather than burned. The last controlled burn occurred in 1962 (NEESA, 1985; NAVFACSW, 1990; NSWC Indian Head, 2003). The facilities ceased operation in 1972 and have been inactive since that time.

In addition to Building 98 operations, the floors in Buildings 101-102 periodically were washed down, and Explosive D contaminated wash water exited through floor drains and discharged to a 50-foot-by-50-foot evaporation pond on the east side of Buildings 101-102 (IRP Site 3). An estimated total of 520 pounds of Explosive D mixed with wash water were discharged into the evaporation pond (NEESA, 1985).

Analytical sampling in 2003 by Naval Surface Warfare Center of the inside of Buildings 98, 101, and 102 confirmed the presence of explosives in cracks and drains. Findings from the survey concluded that Building 101 contains explosive processing equipment and explosive transfer lines that must be removed and decontaminated. The report also recommended that all the drains from Buildings 101 and 102 and the areas underneath cracks be treated as contaminated and potentially explosive and be evaluated and/or cleaned prior to removal. The greatest concern was focused on a sample from Building 101 and one from Building 102 that contained RDX at concentrations at 248,611 microgram/gram (μg/g) and 157,153 μg/g, respectively (NSWC Indian Head, 2003). These concentrations are greater than 10% by volume, which presents an explosive hazard. In addition, RDX was not reported to be associated with the activities at Buildings 101 and 102 and, therefore, has not been investigated in the evaporation ponds.

<u>Previous Investigations</u>

SI Final Report (NEESA, 1990)

The 1990 SI investigated IRP Site 2 (Figure 5.3-2) and analyzed soil samples at 0.5, 2.0, and 3.5 bgs for Explosive D breakdown products (ammonia as nitrogen, picric acid, and picramic acid). The only analyte detected was ammonia as nitrogen at low concentrations attributed to background or agricultural practices. The report recommended that additional investigation be conducted to determine if a) other breakdown products of Explosive D should be investigated, b) MC migrated to groundwater, and c) other areas not investigated (e.g., IRP Site 3) were impacted.

IRP Final (Revision 1) OU-4Unit-4 SI Report (NAVFACSW, 1998a)

The 1998 SI sampled the IRP Sites 2 and 3 evaporation ponds at approximately 0.5 and 1.75 feet bgs and the concrete settling basin behind Building 98 (IRP Site 36) at 0.4 and 2.5 feet bgs

(Figure 5.3-3) for explosives (naphthalic acid, nitrocellulose, nitroglycerine, nitroguanidine, and picric acid) and nitrogen compounds (ammonia-N, nitrate-N, and TKN). The 1998 SI reported that no explosive compounds were detected and that nitrogen compounds were not present in soil at concentrations of concern. The report notes that impacts to ecological receptors would be addressed under a separate study (NAVFACSW, 1998b).

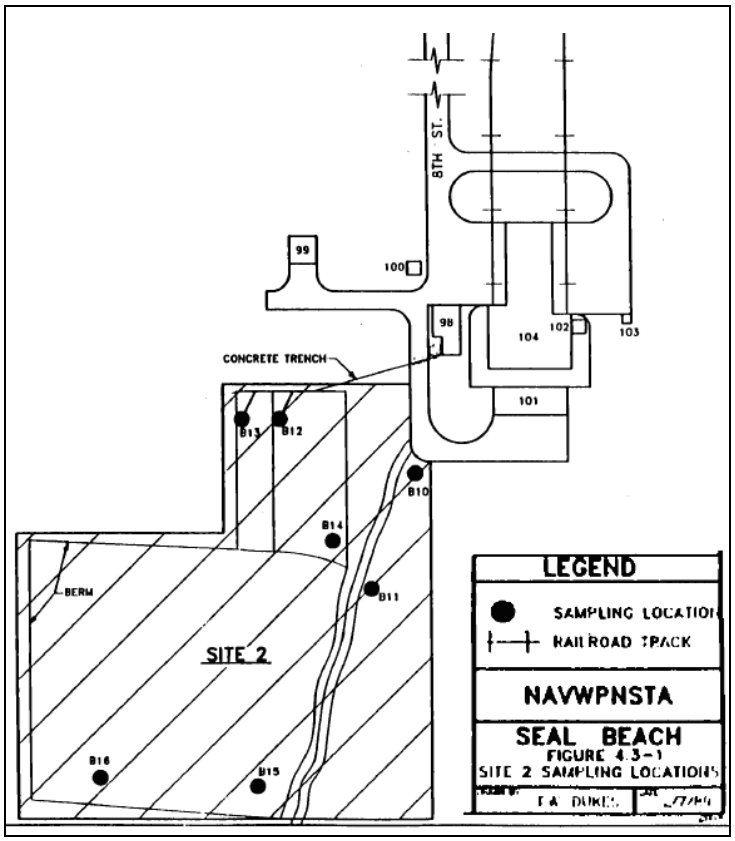

Figure 5.3-2: 1990 Final Report SI sample locations

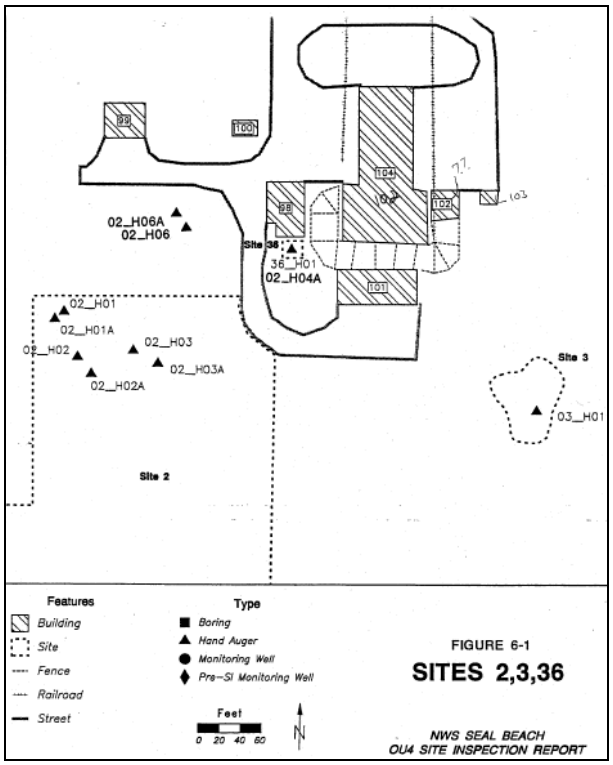

Figure 5.3-3: 1998 IRP Final (Revision 1) OU-4 SI Report sample locations

During this PSI, Malcolm Pirnie reviewed the sampling methodology for the IRP Final OU-4 SI. The review of the OU-4 SI and of historical engineering diagrams and aerial photographs identified the following sampling methodology concerns:

a) The samples were not analyzed for a full explosives suite, including RDX.
b) Background concentrations (borings 02_H06 and 02_H06A) for COPCs were collected in an area that was possibly used for site drainage south of Building 98 (Figure 5.3-3).
c) Contrary to the SI report results section, low unquantifiable concentrations (i.e., greater than the method detection limit, but below the reporting limit) of explosives (naphthalic

acid, nitrocellulose, nitroglycerine, nitroguanidine, and picric acid) were detected at IRP Site 2.

d) The location of IRP Site 3 was incorrectly determined and sampled (Figure 5.3-3 and Figure 5.3-4).

e) Soil samples collected from IRP Site 36 were too shallow, as the concrete basin had a concrete floor and was filled with roughly 2 feet of assumed clean fill.

f) A 4-foot-square pit used for an unknown purpose and filled with earth has not been investigated (Additions to Explosive D Stream Out Shed, Bldg 98, 1958).

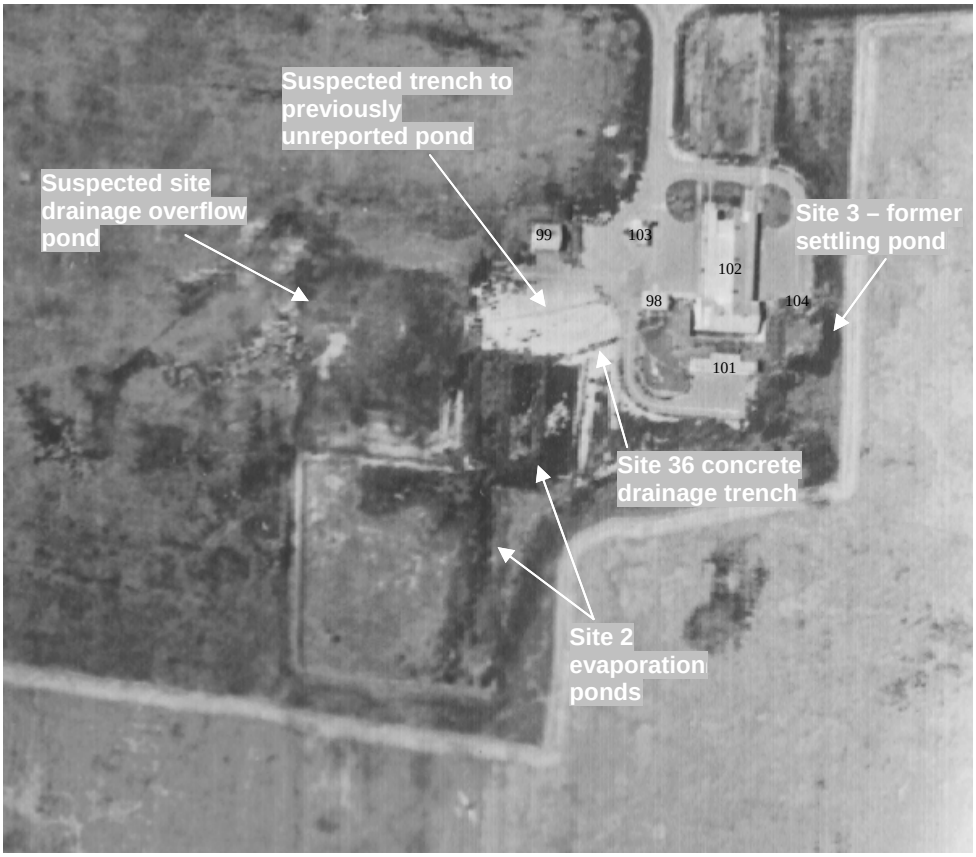

Figure 5.3-4: 1956 aerial photograph showing evaporation ponds and site configuration

5.3.1.1. Topography

The site has flat terrain and is at an elevation of approximately 10 feet asl. For additional information on the topography of NAVWPNSTA Seal Beach, see Section 3.2.

5.3.1.2. Geology

Buildings 101-102 Evaporation Ponds surficial geology is characterized by alluvial and coastal deposits (Qal) (NAVFACSW, 1998a). Section 3.3 includes a more detailed description of the geology of NAVWPNSTA Seal Beach.

5.3.1.3. Soil and Vegetation Types

Soil at the site is predominantly clay and silt layers. The IAS and INRMP note the area to be characterized by drained Bolsa silty clay loam, which occurs on large alluvial fans and is moderately to slowly permeable. Runoff is slow over bare level soil, and the erosion hazard is slight (NEESA, 1985; NAVWPNSTA Seal Beach, 2007). The soil is moderately alkaline and calcareous to a depth of about 49 inches (NEESA, 1985). Section 3.4 includes a general description of the soil types at NAVWPNSTA Seal Beach.

The Building 98 evaporation ponds are characterized as southern willow scrub. The vegetation in the vicinity is primarily agricultural crops of lima beans and barley (NAVWPNSTA Seal Beach, 2007; Ms. Tamashiro, pers. comm.). Section 3.4 includes a general description of the vegetation types at NAVWPNSTA Seal Beach.

5.3.1.4. Hydrology

There are no permanent water bodies on site. Runoff is expected to be slow over bare level soil, and surface water is expected to intermittently pond and infiltrate to groundwater. Surface water on the site generally flows southwest following the topography of the installation (NAVFACSW, 2002). Section 3.5 includes a general description of the hydrology of NAVWPNSTA Seal Beach.

5.3.1.5. Hydrogeology

Groundwater in the vicinity of the site is approximately 10 feet bgs and is reported to flow to the northeast; however, the direction may vary seasonally (NAVFACSW, 1999). Groundwater is no longer used for drinking water at NAVWPNSTA Seal Beach, although parts of the station do use groundwater for agricultural irrigation (NAVWPNSTA Seal Beach, 2007). There are no wells reported in the vicinity of the site. The closest reported production well to the site, near the Contractors Gate, is screened at roughly 600 feet bgs (NAVFACSW, 1998a). Lateral groundwater movement in the moderately permeable shallow aquifer is estimated to be several hundred feet per year (NEESA, 1985). Section 3.6 includes a general description of the hydrogeology of NAVWPNSTA Seal Beach.

5.3.1.6. Cultural and Natural Resources

There are no known significant cultural resources within or adjacent to the site (NAVFACSW, 2002; COUP Incorporated, n.d.). The IRP Site 2 evaporation pond scrub willow provides a wildlife corridor to the Seal Beach NWR (NAVWPNSTA Seal Beach, 2007). Section 3.7 includes a description of the cultural and natural resources of NAVWPNSTA Seal Beach.

5.3.1.7. Endangered and Special Status Species

Federally and state listed endangered or threatened species are documented at NAVWPNSTA Seal Beach, although they are primarily associated with the Seal Beach NWR (NAVWPNSTA Seal Beach, 2007; CDFG, 2007). Additional information on sensitive species data for NAVWPNSTA Seal Beach is presented in Section 3.8.

5.3.2. Visual Survey Observations and Results

A visual survey of Buildings 98 through 104 was conducted on 15 November 2007. During the visual survey, the following Malcolm Pirnie team members were present: Ms. Caruso (Team Leader), Mr. Schulman, Mr. Storrs (UXOSS), Ms. Gerritzen, and Mr. Asakawa. The following Navy representatives were present during the visual survey: Ms. Tamashiro and Mr. Gordon. The field team conducted the visual survey by walking the outside perimeter of each building and the associated settling ponds (IRP Sites 2 and 3). Vegetation growing in the IRP Site 2 ponds was too dense to allow entry. IRP Site 3 and the concrete settling basin (IRP Site 36) were 100% visually surveyed.

Building 98 is a three-sided corrugated metal shed built on a concrete slab (Figure 5.3-5). Behind Building 98 on the south side was a concrete baffled basin (IRP Site 36) filled with earth (Figure 5.3-6). Buildings 101 and 102 were both single-story with concrete floors. Building 99 formerly housed a generator. Building 103 was labeled for paint/flammable storage, and Building 104 was small locked magazine. None of the buildings were in use, and only Buildings 99 and 101 were unlocked.

Figure 5.3-5: View of east side of Building 98 with concrete basin on southern side
(Photograph was taken during the November 2007 on-site visual survey.)

Figure 5.3-6: View of concrete settling basin and former concrete tank cradles on south side of Building 98. Concrete channel drains to IRP Site 2 evaporation ponds.
(Photograph was taken during the November 2007 on-site visual survey.)

Building 101 has three bays, which contained dry scrubbers/hoppers used for the collection of explosives that were removed in Building 102. The eastern and western bays each contained three dry scrubbers that were connected in series. The central bay housed the hydraulic units (labeled defusing machines) and the exhausters that supplied air to the dry scrubbing transport system. Building 102 appeared to be empty, although it could only be viewed by looking through a crack in a broken window.

The IRP Site 2 evaporating ponds and perimeter berm were heavily overgrown by vegetation. The east side of the ponds was being used to raise honey bees with a number of beehive boxes and bees present. The concrete settling basin behind Building 98 (IRP Site 36) was present and filled with earth. The concrete trench originating from the concrete basin extended to the northeast vegetated corner of the IRP Site 2 evaporation pond, where it split in two directions (Figure 5.3-6). At the time of the site visit, the agricultural lands adjacent to the site had recently been plowed and the surface was soft bare earth. There was no indication of the former IRP Site 3 evaporation pond near Buildings 101-102 (Figure 5.3-7).

Figure 5.3-7: View east of Buildings 101-102 Explosive D former wash water pond (IRP Site 3)
(Photograph was taken during the November 2007 on-site visual survey.)

A visual depiction of the site reconnaissance is provided on Map 5.3-1 located at the end of Section 5.3. Additional site details are illustrated on Map 5.3-2, also located at the end of Section 5.3.

5.3.3. Munitions and Munitions Related Materials Associated with the Site

This section describes the munitions or munitions related materials known or suspected to be at the site, including the types and estimated maximum penetration depths. This includes both MEC and nonhazardous munitions related scrap.

Munitions were not processed or disposed outside of the buildings or in the evaporation ponds. The Buildings 101-102 complex disposed wash water with Explosive D into evaporation ponds (NEESA, 1985; NAVFACSW, 1990; NSWC Indian Head, 2003). In addition, RDX was detected inside of Buildings 101 and 102, but has not been evaluated at the evaporation ponds (NSWC Indian Head, 2003).

Based on the information obtained during the data collection process, the site is not known or suspected to contain CWM filled munitions, electrically fuzed munitions, or DU associated munitions.

5.3.4. MEC Presence

The entire site has been subdivided and categorized into one of three levels of MEC presence, including: known MEC areas, suspected MEC areas, and areas not suspected to contain MEC. Known MEC areas are those areas where MEC were found in the past, a removal of MEC was conducted, EOD responses occurred at the site, or MEC were found during the site visit. Suspected MEC areas are those areas where no MEC have been found at the site; however, training or disposal may have occurred at the site, historical documents indicate MEC may be present, or there is the potential for MEC to be found at the site. Areas not suspected to contain MEC are those where full removals have occurred or no records have been found of munitions being used at the site.

Map 5.3-3 illustrates the munitions characterization of the Buildings 101-102 Evaporation Ponds and is provided at the end of Section 5.3.12.

5.3.4.1. Known MEC Areas

There are no known MEC areas associated with the site.

5.3.4.2. Suspected MEC Areas

There are no suspected MEC areas associated with the site.

5.3.4.3. Areas Not Suspected to Contain MEC

The Buildings 101-102 Evaporation Ponds is a site not suspected to contain MEC.

5.3.5. Ordnance Penetration Estimates

MEC are not expected to be present at the Buildings 101-102 Evaporation Ponds; therefore, penetration depths are not evaluated.

5.3.6. MC

A total of 45 tons of Explosive D were disposed of at the site, as presented in Section 5.3.1. Explosive D and associated breakdown products, which may include picric acid and piramic acid, were disposed of with wash water into the Buildings 98 and 101-102 evaporation ponds. Precipitates expected to form during the breakdown process are calcium, sodium, ammonia, nickel, and zinc salts based on the relative concentrations of these metals in the soil (NEESA, 1990). Additionally, RDX was detected in Buildings 101 and 102 at concentrations creating an explosive hazard. Previous investigations have not sampled for RDX in the evaporation ponds.

5.3.7. Contaminant Migration Routes

Migration of MC, if present, may occur through soil pathways that include plant and animal uptake and physical migration of MC to subsurface soil. MC in surface soil can potentially leach through soil to groundwater in the shallow alluvial aquifer; however, this aquifer is not used at NAVWPNSTA Seal Beach. A detailed CSM of migration and exposure pathways is presented in Section 5.3.11.

5.3.8. Receptors

Human receptors include Navy personnel, contractors (including maintenance and environmental), Navy-escorted visitors, and farmers. Ecological receptors (biota) are also potential receptors.

5.3.8.1. Nearby Populations

Population data for NAVWPNSTA Seal Beach and its vicinity are presented in Section 5.1.8.1.

5.3.8.2. Buildings Near/Within Site

The following buildings are associated with the site:

- Building 98, Explosive D steam out building

- Building 101, vacuum dust removal building
- Building 102, ammunition rework building
- Building 99, former generator building
- Building 103, paint/flammable storage building
- Building 104, small locked unused magazine

5.3.8.3. Utilities On/Near Site

There are two fire hydrants located in the northern portion of the Buildings 101-102 site. There are no other utilities located at the evaporation ponds.

5.3.9. Land Use

The Buildings 101-102 complex is no longer in use. The IRP Site 2 evaporation ponds are maintained by NAVWPNSTA Seal Beach as part of a riparian corridor to the Seal Beach NWR. The east side of the IRP Site 2 ponds is being used to raise honey bees. The IRP Site 3 evaporation pond is undeveloped land and unused. Land adjacent to the site is used primarily for agriculture with a small portion to the south maintained as open land (NAVWPNSTA Seal Beach, 2007). Future land use is expected to be the same, other than for the projected removal of Buildings 101 and 102 (NSWC Indian Head, 2003).

5.3.10. Access Controls/Restrictions

The site is located on NAVWPNSTA Seal Beach, which is a fenced and guarded installation. Security Forces personnel are responsible for maintaining law and order and for implementing access control policies and procedures. Access to site from within NAVWPNSTA Seal Beach is unfenced and controlled by vehicular security patrol.

5.3.11. CSM

This CSM was developed following guidance documents issued by the USEPA for hazardous waste sites and the USACE for ordnance and explosives sites. Guidance documents include the USEPA's *Guidance for Conducting Remedial Investigations and Feasibility Studies under CERCLA* (EPA/540/G-89/004) and the *Final USACE CSM Guidance Development of Integrated Conceptual Site Models for Environmental Ordnance and Explosives Sites* (USACE, 2003).

The CSM describes the site and its environmental setting. The CSM presents information regarding: 1) MEC and/or MC known or suspected to be at the site; 2) current and future

reasonably anticipated or proposed uses of the real property; and 3) actual, potentially complete, or incomplete exposure pathways linking them. The CSM is the basis for the prioritization and remediation cost estimate.

The CSM is presented in a series of information profiles that present information about the site. The information profiles are included in Table 5.3-1.

Table 5.3-1: CSM Information Profiles – Buildings 101-102 Evaporation Ponds

Profile Type	Information Needs	PSI Findings
Range/Site Profile	Installation Name	NAVWPNSTA Seal Beach
	Installation Location	NAVWPNSTA Seal Beach is located in the city of Seal Beach in Orange County, California, approximately 26 miles south of the Los Angeles urban center and 8 miles east of Long Beach.
	Range/Site Name	Buildings 101-102 Evaporation Ponds (IRP Sites 2 and 3)
	Range/Site Location	The site is located south of Westminster Street at the end of 8th Street and is comprised of the evaporation ponds associated with Buildings 98 and 101-102.
	Range/Site History	The complex operated from 1945 through the mid-1950s, in 1962, and in 1971 for demilitarizing 5-inch projectiles. Roughly 45 tons of wash water with Explosive D was discharged to evaporation ponds on site.
	Range/Site Area and Layout	The Building 98 evaporation ponds (IRP Site 2) occupy approximately 2.3 acres. The Buildings 101-102 evaporation pond (IRP Site 3) is roughly 50-foot-by-50-foot in size. The concrete settling basin (IRP Site 36) is roughly 16 feet by 8 feet in size.
	Range/Site Structures	Building 98 is the Explosive D Steam Out Building. Buildings 101 and 102 are, respectively, the vacuum dust removal and ammunition rework buildings. Building 99 housed a former generator. Building 103 was used for paint/flammable storage. Building 104 is a small locked magazine.
	Range/Site Boundaries	Map 2.1-1shows the location of the site. N: Unused land and the Westminster POLB Fill Area (Section 5.6) extend to the fenced boundary at Westminster Avenue 0.25 miles to the north. The installation boundary is 1.25 miles to the north, where the installation is bordered by the city of Seal Beach.

Table 5.3-1: CSM Information Profiles – Buildings 101-102 Evaporation Ponds		
Profile Type	**Information Needs**	**PSI Findings**
		S: Agricultural fields lie adjacent to the south. The Case Road POLB Mitigation Pond is located 0.5 miles to the southwest. The installation boundary is located roughly 1.75 miles to the south. Beyond the installation boundary is the Orange County Flood Control Channel, which flows into Anaheim Bay and then the Pacific Ocean, and the city of the Huntington Beach. W: Agricultural fields extend 0.3 miles to the west, beyond which are active installation offices and the cantonment area. The installation boundary is roughly 1.25 miles away, where the installation is bordered by the city of Seal Beach. E: Agricultural fields and magazines are to the east. The cities of Westminster and Huntington Beach border the installation roughly 1 mile away.
	Range/Site Security	The site is located on NAVWPNSTA Seal Beach, which is a fenced and guarded installation. Security Forces personnel are responsible for maintaining law and order and for implementing access control policies and procedures. Access to the site from within NAVWPNSTA Seal Beach is controlled by vehicular security patrol; the site is unfenced.
Munitions/ Release Profile	Munitions Types	The function of the facility was to demilitarize 5-inch projectiles. Munitions were not processed or disposed of outside of the buildings or in the evaporation ponds. The Buildings 101-102 complex disposed wash water with Explosive D into evaporation ponds (NEESA, 1985; NAVFACSW, 1990; NAVFAC, 2003). In addition, RDX has been detected in Buildings 101 and 102 at concentrations presenting an explosive hazard.
	Maximum Probability Penetration Depth	MEC are not known or suspected to be present.
	MEC Density	MEC are not known or suspected to be present.
	MEC Scrap/ Fragments	MEC are not known or suspected to be present.
	Associated MC	Explosive D (ammonium picrate) and associated breakdown products, which may include picric acid and piramic acid, were disposed of with wash water into the Building 98 and 101-102 evaporation ponds. Precipitates expected to form during the breakdown process are calcium, sodium, ammonia, nickel, and zinc salts based on the relative concentrations of these metals in the soil (NEESA, 1990). In addition, RDX has

Table 5.3-1: CSM Information Profiles – Buildings 101-102 Evaporation Ponds		
Profile Type	**Information Needs**	**PSI Findings**
		been identified in Buildings 101 and 102. To date, the evaporation ponds have not been sampled for RDX.
	Migration Routes / /Release Mechanisms	MEC are not known or suspected to be present. Migration of MC may occur naturally through surface soil erosion and by wind and/or mechanically driven dust generation. MC present in soil can potentially leach through soil to groundwater and be bioaccumulated by biota or agricultural crops. Earth moving associated with future construction, excavation, and maintenance at the site are also mechanisms by which MC in soil could be redistributed.
Physical Profile	Climate	The climate at NAVWPNSTA Seal Beach is typical of the maritime subclimate within the prevailing California Mediterranean climate: mild winters, cool summers, high relative humidity, and frequent early morning clouds that lead to afternoon sunshine. The annual average temperature is 74°F. Summer maximum average high temperatures range from 77°F to 84°F, and maximum average lows range from 60°F to 65°F. Winters tend to be moderate, with maximum highs typically 67°F and maximum lows ranging from 45°F to 47°F. Yearly precipitation averages 13 inches per year; February is the wettest month, averaging 3 inches per year, and July is the driest, averaging 0.02 inches per year (WRCC, n.d.). Periodically, the region will experience *El Niño* conditions, which tend to bring wetter winters to the area through heavy storms. Occasionally, strong dry northeasterly winds descend the mountain slopes in the fall, winter, and early spring months. The strongest winds that occur for the region are associated with the winter and spring storms off the Pacific Ocean (NAVFACSW, 2005).
	Topography	NAVWPNSTA Seal Beach is located on flat alluvial deposits that slope southwest from approximately 20 feet asl to sea level at the NWR. The highest topographic feature on the installation is Landing Hill (50 feet asl) on the southwest side of the facility (DTSC, 2003). The site has flat terrain and is at an elevation of approximately 10 feet asl.
	Geology	Buildings 101-102 Evaporation Ponds surficial geology is characterized by alluvial and coastal deposits (Qal) (NAVFACSW, 1998a).
	Soil	Soil at the site is predominantly clay and silt layers. The poorly drained soil type is typical for NAVWPNSTA Seal Beach (NEESA, 1985; NAVFACSW, 2002). The IAS and INRMP note the area to be characterized by drained Bolsa silty clay loam, which occurs on large alluvial fans and is

Table 5.3-1: CSM Information Profiles – Buildings 101-102 Evaporation Ponds		
Profile Type	**Information Needs**	**PSI Findings**
		moderately to slowly permeable (NEESA, 1985; NAVWPNSTA Seal Beach, 2007). Runoff is slow over bare level soil, and the erosion hazard is slight. The soil is moderately alkaline and calcareous to a depth of about 49 inches (NEESA, 1985).
	Hydrogeology	Groundwater in the vicinity of the site is approximately 10 feet bgs and is reported to flow to the northeast (NAVFACSW, 1999). Groundwater is no longer used for drinking water at NAVWPNSTA Seal Beach, although parts of the station do use groundwater for agricultural irrigation (NAVWPNSTA Seal Beach, 2007). There are no wells reported in the vicinity of the site. Lateral groundwater movement in the moderately permeable shallow aquifer is estimated to be several hundred feet per year (NEESA, 1985).
	Hydrology	There are no permanent water bodies on site, although water will pond in the bermed IRP Site 2 evaporation ponds. Site-specific surface flow is unknown, although surface water will generally flow southwest following the topography of the installation (NAVFACSW, 2002). Surface water flow is expected to intermittently pond and infiltrate to groundwater. In general, runoff at NAVWPNSTA Seal Beach either ponds or flows overland through man-made channels, natural ditches, and/or tidal sloughs. Flow is intermittent in channels and ditches and is dependent on rainfall and excess landscape irrigation runoff (NAVWPNSTA Seal Beach, 2007).
	Vegetation	The Building 98 evaporation ponds are characterized as southern willow scrub. The vegetation in the vicinity is primarily agricultural crops of lima beans and barley (NAVWPNSTA Seal Beach, 2007; Ms. Tamashiro, pers. comm.).
Land Use and Exposure Profile	Current Land Use	The evaporation ponds and associated buildings are no longer in use. The east side of the IRP Site 2 ponds is being used to raise honey bees. The nearby surrounding land is used for agriculture activities or is unused. The IRP 2 evaporation ponds are maintained by NAVWPNSTA Seal Beach as part of a riparian corridor to the Seal Beach NWR (NAVWPNSTA Seal Beach, 2007).
	Current Human Receptors	Current human receptors include Navy personnel, and contractors (including maintenance personnel), and Navy-escorted visitors. Leaseholder farmers and farm workers are also potential receptors.
	Current Activities	Buildings 98 and 101-102 and the associated evaporation ponds are inactive and no longer in use. Current activities on

Table 5.3-1: CSM Information Profiles – Buildings 101-102 Evaporation Ponds		
Profile Type	**Information Needs**	**PSI Findings**
	(frequency, nature of activity)	site include infrequent clearing of nests and overgrowth at the unused buildings, site visits to conduct environmental and ecological surveys, and raising honey bees. Activities adjacent to the site are primarily agricultural farming.
	Potential Future Land Use	Future land use is expected to be the same as present use. Additionally, the Buildings 101-102 complex has been funded through Public Works to be demolished (Ms. Tamashiro, pers. comm.). After the demolition of the buildings, continued agricultural use in the vicinity of the site is likely.
	Potential Future Human Receptors	Future receptors are expected to be the same as current receptors.
	Potential Future Land Use Related Activities	Future activities at the site potentially include building demolition by construction workers, environmental and ecological surveys, and riparian restoration projects by Navy personnel and contractors. Crop cultivation by leaseholders is also expected.
	Zoning / Land Use Restrictions	The site is part of a secure and active Navy base. The IRP Site 2 evaporation pond scrub willow habitat is maintained as part of a wildlife corridor to the Seal Beach NWR (NAVWPNSTA Seal Beach, 2007). There are no other known land use restrictions.
	Demographics/ Zoning	NAVWPNSTA Seal Beach has a combined workforce of 150 military personnel and 600 civilian personnel. Population data for the vicinity include the following (U.S. Census, 2000):: • City of Seal Beach: 24,154 • City of Westminster: 88,207 • City of Huntington Beach: 189,594 • Orange County: 2,846,289
	Beneficial Resources	The IRP 2 evaporation ponds are part of a riparian corridor to the Seal Beach NWR, which provides protected habitat for migratory birds and for other endangered, threatened, and sensitive species (NAVWPNSTA Seal Beach, 2007).
Ecological Profile	Habitat Type	The IRP Site 2 evaporation ponds and a small area to the south of them are characterized as riparian woodland of southern willow scrub (NAVWPNSTA Seal Beach, 2007). The site is surrounded on three sides by agricultural land. To the north of the site is Westminster Street, which is characterized by dredged fill soil from the POLB Mitigation Pond that has sparse grass and pickleweed (*Salicornia spp.*) cover.

Table 5.3-1: CSM Information Profiles – Buildings 101-102 Evaporation Ponds		
Profile Type	**Information Needs**	**PSI Findings**
	Degree of Disturbance	The site was formerly used for activities related to the Buildings 101-102 complex evaporation ponds. The site is presently unused.
	Ecological Receptors and Species of Special Concern	Reported mammals at the installation include various species of pocket gophers, voles, shrews, and ground squirrels, Audubon's cottontail rabbit (*Sylvilagus audubonii*), and brush rabbit (*Sylvilagus bachmani*). Nineteen species of raptors are known to occur on NAVWPNSTA Seal Beach, nine of which nest on the installation: red-tailed hawk (*Buteo jamaicensis*), Swainson's hawk (*Buteo swainsoni*), great-horned owl (*Bubo virginianus*), burrowing owl (*Athene cunicularia*), loggerhead shrike (*Lanius ludovicianus*), American kestrel (*Falco sparverius*), great blue heron (*Ardea herodias*), common raven (*Corvus corax*), and American crow (*Corvus brachyrhynchos*). The avian wildlife at the installation forage over a large area and potentially may inhabit the Buildings 101-102 Evaporation Ponds site for short periods of time (NAVFACSW, 2005; NAVWPNSTA Seal Beach, 2007). Resident or migrant bird species listed by federal or state agencies, or both, as threatened or endangered include the following: • Belding's savannah sparrow (*Passerculus sandwichensis beldingi*) • California brown pelican (*Pelecanus occidentalis californicus*) • California least tern (*Sterna antillarum browni*) • Light-footed clapper rail (*Rallus longirostris levipes*) • Western snowy plover (*Charadrius alexandrinus nivosus*) The breeding season for these shorebird and salt marsh species extends from approximately late January to mid-September. The California least tern occupies the Seal Beach NWR only during the breeding season with most of its food supply coming from the Seal Beach NWR during that period (NAVFACSW, 2005).
	Relationship of MEC/MC Sources to Habitat and Potential Receptors	MEC are not suspected at the site. However, ecological receptors may be exposed to MC that have been incorporated into the food chain (e.g., bioaccumulated in plants and animals). Various mammals and other animals that inhabit the area may come into contact with MC while burrowing, foraging, or nesting. They may also consume plants and/or prey that have bioaccumulated MC.

A key element of the CSM is the exposure pathway analysis, which brings the information profiles about site conditions, MEC/MC status, and possible receptors into a complete picture. The exposure pathway analysis is critical for the CSM because it helps establish the hypothesis of the site and determines the potential course that MEC and/or MC take from a source to a receptor. Recommendations for the site are then based on the exposure pathway analysis, ranging from no further action to an SI.

For MEC, a complete or potentially complete exposure pathway must include the following components: 1) a source (e.g., locations where MEC are expected to be found); 2) access (e.g., controlled or uncontrolled access, items on the surface or within the subsurface); 3) an activity (e.g., nonintrusive grounds maintenance, intrusive construction); and 4) receptors (e.g., Navy personnel, construction workers, recreational users, authorized visitors). It is important to recognize that environmental mechanisms (e.g., erosion) and/or human intervention may result in the repositioning of MEC.

For MC, a complete or potentially complete exposure pathway must include the following components: 1) a source (e.g., locations where MC are expected to be found); 2) an exposure medium (e.g., surface soil); 3) an exposure route (e.g., dermal contact); and 4) receptors (e.g., Navy personnel, construction workers, recreational users, authorized visitors). If the point of exposure is not at the same location as the source, the pathway may also include a release mechanism (e.g., erosion) and a transport medium (e.g., surface water).

The potential interactions between the source and receptors are assessed differently for MEC and MC. For MEC, interaction between the potential receptors and an MEC source has two components. The receptor must have access to the source and must engage in some activity that results in contact with individual MEC items within the source area. For MC, interaction between the source and receptors involves a release mechanism for the MC, an exposure medium that contains the MC, and an exposure route that places the receptor into contact with the contaminated medium.

A graphical illustration of the details of the CSM is included in Figure 5.3-8.

MEC Interactions and Pathway Analysis

There are no known or suspected MEC associated with the evaporation ponds. Consequently, no graphical MEC exposure analysis has been included.

MC Interactions and Pathway Analysis

Potential receptors include both humans and biota that may be exposed to MC in the source medium. For MC, there is a potential release mechanism for MC (e.g., physical migration, uptake into the food web), an exposure medium containing the MC (e.g., soil), and a potential exposure route (e.g., incidental ingestion, dermal contact, inhalation) that places the receptor into contact with the contaminated medium. Pathways for surface water / sediment and for soil are discussed below.

Surface Water / Sediment

There are no surface water sources within the site boundary. The nearest permanent surface water source is the Case Road POLB 50-acre mitigation pond 0.5 miles away. Consequently, all surface water exposure pathways to humans and biota are evaluated as incomplete.

Soil

Release mechanisms for MC in soil with potentially complete pathways include leaching to groundwater, plant and animal uptake, physical migration, and leaching to subsurface soil. Human receptors may come in contact with MC in surface and/or subsurface soil during construction/demolition activities (e.g., Buildings 101-102 demolition) or environmental work (e.g., field surveys, drilling, and soil sampling). Exposure routes include incidental ingestion of and dermal contact with soil and inhalation of surface and subsurface dust generated by wind or during surface and subsurface earth moving activities. Biota receptors may come in contact with MC in surface and/or subsurface soil by plant uptake of MC or incidental soil ingestion while burrowing, foraging, or nest building. Similar to humans, inhalation of MC-impacted dust is possible from wind or earth moving activities. MC in soil can potentially bioaccumulate in biota that uptake MC at the site.

Groundwater

Groundwater is not used for drinking water on NAVWPNSTA Seal Beach and is primarily too deep for direct exposure by humans, plants, or animals. Furthermore, there are no groundwater wells in the vicinity of the site, and NAVWPNSTA Seal Beach production wells are greater than 600 feet bgs. Because shallow groundwater is tidally influenced and flows into the salt water marshes at the installation, there is a potentially complete pathway between MC in shallow groundwater and biota in the marshes.

Inhalation due to MC volatilization for all other media except soil is evaluated to be incomplete based on the low volatility of the MC of concern (i.e., metals, explosives) and the open unconfined environment of the site.

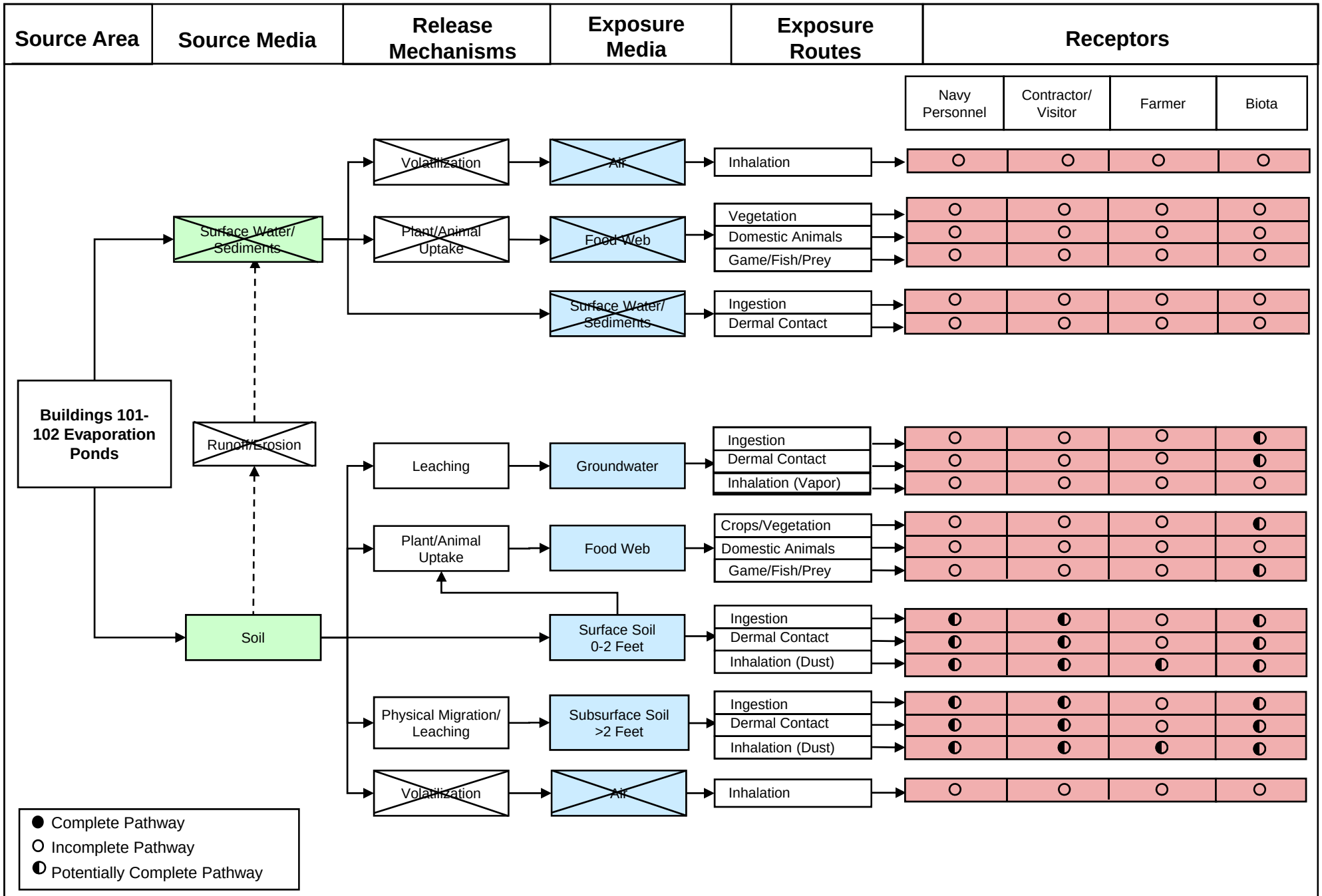

MALCOLM PIRNIE

Prepared for:

PRELIMINARY SITE INSPECTION – DRAFT FINAL PSI REPORT
BUILDINGS 101-102 EVAPORATION PONDS – MC EXPOSURE PATHWAY ANALYSIS
NAVWPNSTA SEAL BEACH, CALIFORNIA

MALCOLM PIRNIE, INC.

Figure 5.3-7
December 2008

5.3.12. Summary

The Buildings 101-102 Evaporation Ponds are located south of Westminster Street at 8th Street. The site is comprised of the four unlined evaporation ponds associated with Buildings 101-102 and 98. The complex operated from 1945 through the mid-1950s, in 1962, and in 1971 for demilitarizing 5-inch projectiles. Wash water with Explosive D was generated during final steam and warm water washout of projectile casings in Building 98. Wash water with Explosive D was discharged to a baffled concrete basin (IRP Site 36) on the south side of Building 98 for primary settling. Once through the concrete basins, the wash water drained through a concrete trench to a series of three evaporation ponds, totaling 2.3 acres (IRP Site 2). From 1945 to mid-1971, roughly 45 tons of Explosive D mixed with wash water was drained into the three IRP Site 2 ponds for evaporation and settling. In addition to wash water generated in Building 98, an additional 520 pounds of wash water with Explosive D was discharged to the east of Building 101-102 into a 50-foot-by-50-foot evaporation pond (IRP Site 3). In addition, RDX has been found in high concentrations within Buildings 101 and 102. Previous investigations of the ponds have not analyzed for RDX. The Buildings 101-102 Evaporation Ponds are not suspected to contain MEC. However, potentially complete MC exposure pathways are present.

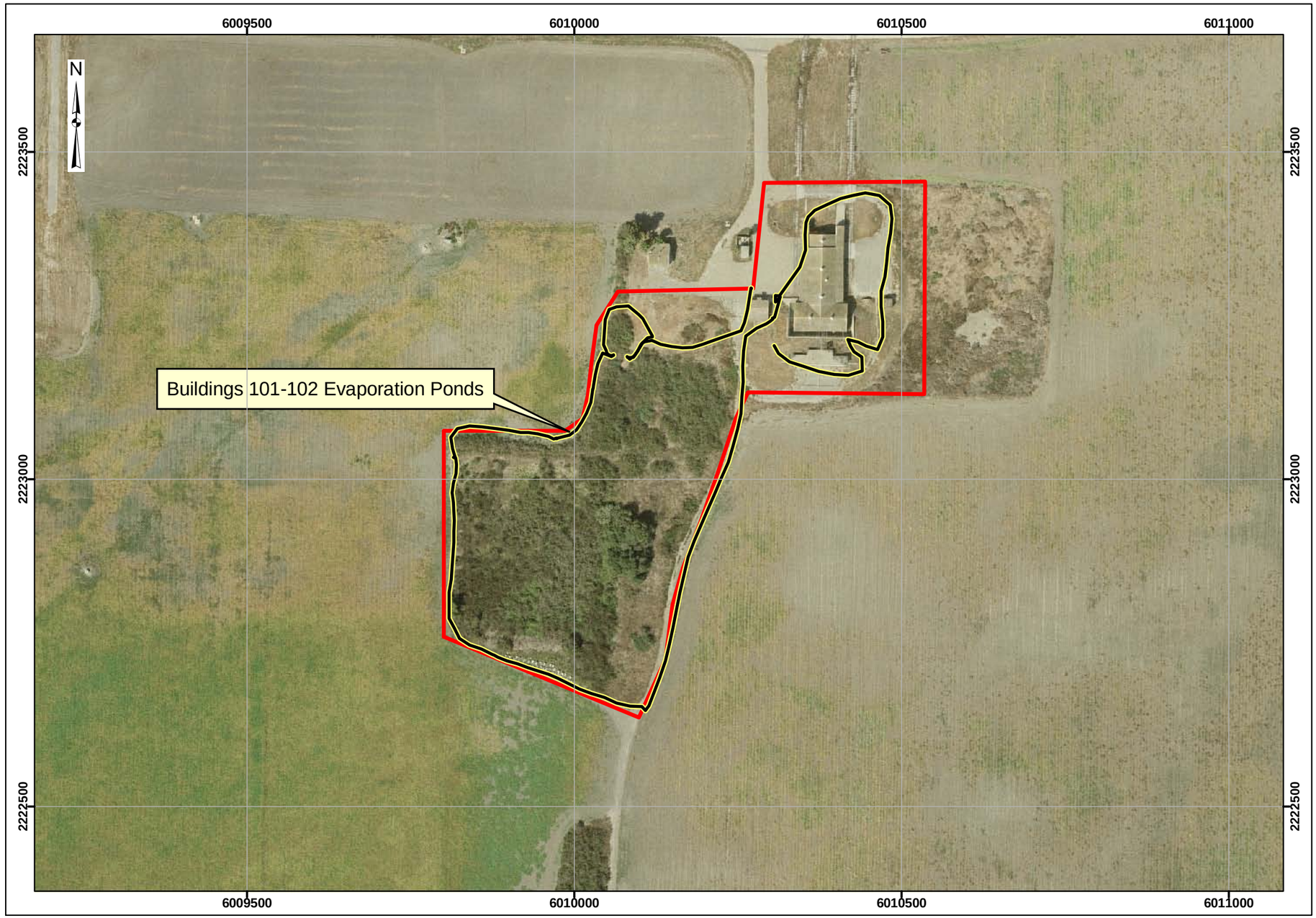

Draft Final Preliminary Site Inspection
NAVWPNSTA Seal Beach, California

MALCOLM PIRNIE

Map 5.3-1
Visual Survey
Buildings 101-102 Evaporation Ponds

Legend

- Installation Boundary
- MRP Sites
- Site Reconnaissance

0 25 50 100 Meters

Data Source: NAVWPNSTA Seal Beach Aerial, GIS Data, 2007

Coordinate System: UTM, Zone 11N
Datum: NAD 83
Units: meters

Contract: N62472-02-D-1300
Edition: Draft Final Preliminary Site Inspection
Date: December 2008

This page intentionally is blank.

Draft Final Preliminary Site Inspection
NAVWPNSTA Seal Beach, California

MALCOLM PIRNIE

Map 5.3-2
Range/Site Details
Buildings 101-102 Evaporation Ponds

Legend

- Installation Boundary
- MRP Sites
- Contours (2-ft interval)

0 25 50 100 Meters

Data Source: NAVWPNSTA Seal Beach Aerial, GIS Data, 2007

Coordinate System: UTM, Zone 11N
Datum: NAD 83
Units: meters

Contract: N62472-02-D-1300
Edition: Draft Final Preliminary Site Inspection
Date: December 2008

NAVWPNSTA Seal Beach, California

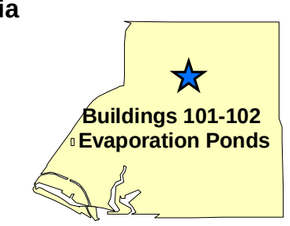

This page intentionally is blank.

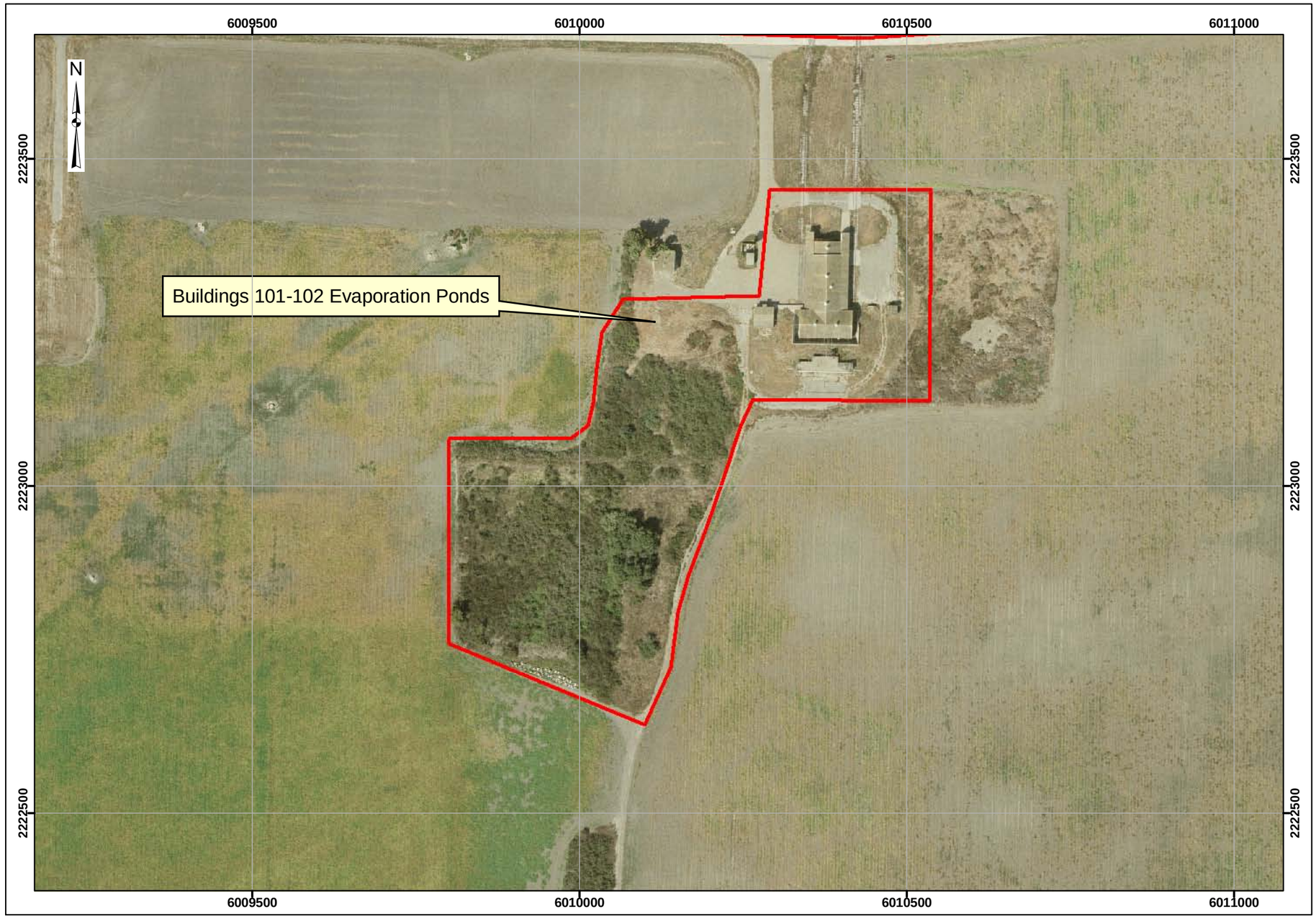

Draft Final Preliminary Site Inspection
NAVWPNSTA Seal Beach, California

MALCOLM PIRNIE

Map 5.3-3
Munitions Characterization
Buildings 101-102 Evaporation Ponds

Legend

Installation Boundary

MRP Sites

MEC Presence*

Known

Suspect

*MEC Presence was determined through review of historical documentation, interviews, and visual survey.

0 25 50 100 Meters

Data Source: NAVWPNSTA Seal Beach Aerial, GIS Data, 2007

Coordinate System: UTM, Zone 11N
Datum: NAD 83
Units: meters

Contract: N62472-02-D-1300
Edition: Draft Final Preliminary Site Inspection
Date: December 2008

This page intentionally is blank.

5.4. Building 94 Settling Basin

5.4.1. History and Site Description

Building 94 (gun propellant charge loading and breakdown facility) and the associated former settling basin are located east of Case Road in the central portion of the installation (Map 2.1-1; Figure 5.4-1). Building 94 was commissioned in 1945 to load and break down 20-mm, 40-mm, 3-inch, and 5-inch projectiles. The cartridge case loading function consisted of filling both 3-inch and 5-inch cases with smokeless powder (NEESA, 1985). From 1945 to 1970, about 1.5 tons of waste smokeless powder was generated per week. It is unknown when the facility discontinued use, although it reportedly was used through at least 1981 (NEESA, 1985; NSWC Indian Head, 2003).

Small amounts of spillage reportedly occurred during operations, which were swept up, placed in powder cans, and taken to a magazine for storage. It is also reported that the interior of Building 94 occasionally was washed down with water to prevent smokeless powder dust accumulation, and the wash water drained through floor drains (NEESA, 1985). In 2003, analytical sampling from inside Building 94 reported below hazard threshold concentrations of RDX, HMX, and picrate in floor drains (NAVFACSW, 2005). This process generates the likelihood for migration of MC from the liquid wash down procedures. This is supported by a Naval Surface Warfare Center explosive hazard characterization evaluation for Building 94. The evaluation noted that a conveyor shaft and four floor drains in the east side of the building have below hazard threshold concentrations of explosives (RDX, HMX, and picrate). The principal concern noted was that Building 94 has the potential for accumulation of gun propellant in drains that are currently inaccessible and that must be evaluated to certify free of hazard (NSWC Indian Head, 2003).

Based on a 1944 engineering diagram, there was a drainpipe, likely associated with the Building 94 floor drains, that originated from the east side of Building 94 that lead to a roughly 50-foot-by-50-foot settling basin (Figure 5.4-1). The use of a building drain to a discharge basin is consistent with the similar use and site history of the Buildings 101-102 Evaporation Ponds (Section 5.3). The settling basin at Building 94 is visible in a 1947 aerial photograph (Figure 5.4-2) and is notable in aerial photographs through 1968, after which it appears to have been graded over. The building was redesigned to drain to the sanitary sewer system at an unknown date (NEESA, 1985). It is possible that this occurred in 1973 when the station's sewer system was connected to the Orange County municipal wastewater collection system (NEESA, 1985).

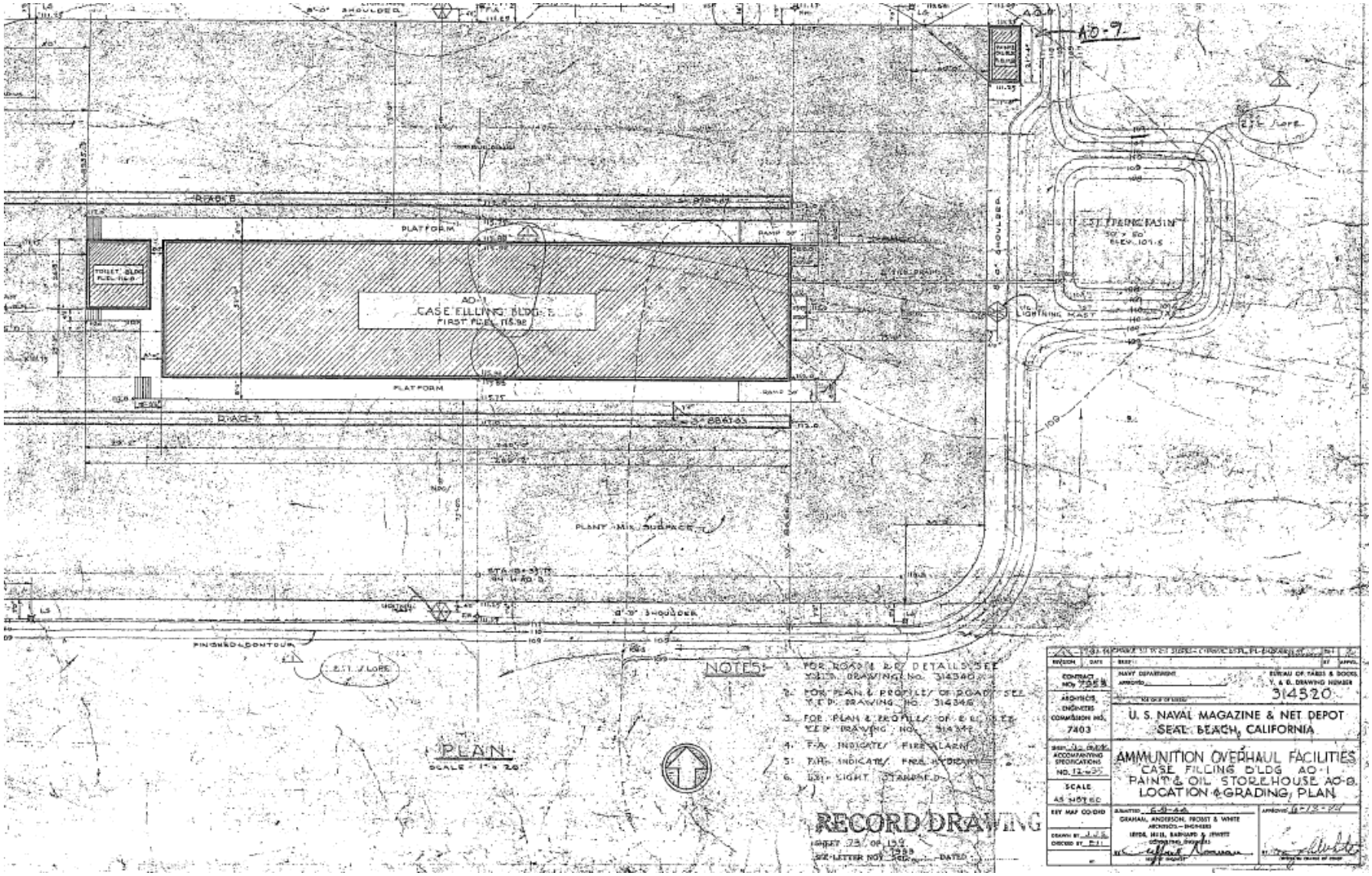

Figure 5.4-1: 1944 engineering diagram with drain pipe and settling basin to east of Building 94

Figure 5.4-2: 1947 aerial photograph with settling basin visible to the east of Building 94

5.4.1.1. Topography

The site has flat terrain and is at an elevation of approximately 7 feet asl. Section 3.2 includes a general description of the topography of NAVWPNSTA Seal Beach.

5.4.1.2. Geology

Building 94 Settling Basin surficial geology is characterized by alluvial and coastal deposits (Qal) (NAVFACSW, 1998a). Section 3.3 includes a more detailed description of the geology of NAVWPNSTA Seal Beach.

5.4.1.3. Soil and Vegetation Types

Soils at the site are predominantly clay and silt layers. The site is near the transition between drained Bolsa silt loam and drained Bolsa silty clay loam. Both soils occur on large alluvial fans and are moderately to slowly permeable with slow runoff and slight erosion hazard over bare level soil. The soils are moderately alkaline and calcareous to a depth of about 49 inches (NEESA, 1985; NAVWPNSTA Seal Beach, 2007). Section 3.4 includes a general description of the soil types at NAVWPNSTA Seal Beach.

The former settling basin currently is located in a previously farmed agricultural field. To the west of the site are 4 acres of southern willow scrub and 4 acres of non-native annual grasses. To

the southwest across from Case Road is wheatgrass grassland vegetation that grades into the coastal salt marsh vegetation of the 50-acre POLB Mitigation Pond (NAVWPNSTA Seal Beach, 2007). Section 3.4 includes a general description of the vegetation types at NAVWPNSTA Seal Beach

5.4.1.4. Hydrology

There are no permanent water bodies on site. Runoff is expected to be slow over bare level soil, and surface water is expected to only intermittently pond and to infiltrate to groundwater. Surface water generally flows southwest following the topography of the installation (NAVFACSW, 2002). Section 3.5 includes a general description of the hydrology of NAVWPNSTA Seal Beach.

5.4.1.5. Hydrogeology

Groundwater in the vicinity of the site is approximately 10 to 20 feet bgs and is reported to flow to the northeast; however, the direction may vary seasonally (NEESA, 1985; (NAVFACSW, 1999). Shallow groundwater is not used for drinking water or agricultural irrigation at NAVWPNSTA Seal Beach, although parts of the station do use groundwater from deeper aquifers for agriculture. Navy Well 2, which is abandoned, reportedly is adjacent to the site and is roughly 725 feet deep. Lateral groundwater movement in the moderately permeable shallow aquifer at NAVWPNSTA Seal Beach is estimated to be several hundred feet per year (NEESA, 1985). Section 3.6 includes a general description of the hydrogeology of NAVWPNSTA Seal Beach.

5.4.1.6. Cultural and Natural Resources

There are no known significant cultural resources within or adjacent to the site (NAVFACSW, 2002; COUP Incorporated, n.d.). Agricultural crops were previously grown over the former settling basin. The 50-acre Case Road POLB Mitigation Pond is 400 yards to the southwest of the site and is part of the Seal Beach NWR, which provides protected habitat for migratory birds and for other endangered, threatened, and sensitive species (NAVWPNSTA Seal Beach, 2007). Section 3.7 includes a more detailed description of the cultural and natural resources of NAVWPNSTA Seal Beach.

5.4.1.7. Endangered and Special Status Species

Federally and state listed endangered or threatened species are documented at NAVWPNSTA Seal Beach, although they are primarily associated with the Seal Beach NWR (NAVWPNSTA

Seal Beach, 2007; CDFG, 2007). Additional information on sensitive species data for NAVWPNSTA Seal Beach is presented in Section 3.8.

5.4.2. Visual Survey Observations and Results

A visual survey of the Building 94 Settling Basin was conducted on 15 November 2007 (Figure 5.4-3). During the visual survey, the following Malcolm Pirnie team members were present: Ms. Caruso (Team Leader), Mr. Schulman, Mr. Storrs (UXOSS), Ms. Gerritzen, and Mr. Asakawa. The following Navy representative was present during the visual survey: Ms. Tamashiro. The field team conducted the visual survey by walking the entire outside perimeter of the building complex and visually observing 100% of the former settling basin area.

Building 94 was locked and no longer in use. A sign that read "Danger Blast Area Keep Clear" was posted on the east side of the building. The visible portions of the inside of the building were largely empty, with only fixed tables and processing equipment remaining. No signs of MEC were present. The former settling basin was no longer visible, and its location had been graded and cultivated. The adjacent former agricultural field was approximately two feet lower in elevation relative to Building 94. At the time of the site visit, the agricultural field had just been plowed, and the surface was soft, bare earth. Since fall 2008, the site is no longer allowed to be used for agricultural out leases. A water well cap was noted to the north side of the asphalt pavement roughly 50 feet north of the site. The well location corresponds to Navy Well 2.

Figure 5.4-3: View of southeast side of Building 94
(Photograph was taken during the November 2007 on-site visual survey.)

A visual depiction of the site reconnaissance is provided on Map 5.4-1 located at the end of Section 5.4.12. Additional site details are illustrated on Map 5.4-2, also located at the end of Section 5.4.12.

5.4.3. Munitions and Munitions Related Materials Associated with the Site

This section describes the munitions or munitions related materials known or suspected to be at the site, including the types and estimated maximum penetration depths. This includes both MEC and nonhazardous munitions related scrap (e.g., fragmentation, base plates, inert mortar fins).

Building 94 was a processing facility for 20-mm, 40-mm, 3-inch, and 5-inch projectiles. From 1945 to 1970, about 1.5 tons of waste smokeless powder were generated per week with small amounts of spillage washed down and drained through floor drains (NEESA, 1985). The settling basin received suspected wash water from Building 94 that potentially contained smokeless powder, RDX, HMX, and picrate.

Based on the information obtained during the data collection process, the site is not known or suspected to contain CWM filled munitions, electrically fuzed munitions, or DU associated munitions.

5.4.4. MEC Presence

The entire site has been subdivided and categorized into one of three levels of MEC presence, including: known MEC areas, suspected MEC areas, and areas not suspected to contain MEC. Known MEC areas are those areas where MEC were found in the past, a removal of MEC was conducted, EOD responses occurred at the site, or MEC were found during the site visit. Suspected MEC areas are those areas where no MEC have been found at the site; however, training or disposal may have occurred at the site, historical documents indicate MEC may be present, or there is the potential for MEC to be found at the site. Areas not suspected to contain MEC are those where full removals have occurred or no records have been found of munitions being used at the site.

Map 5.4-3 illustrates the munitions characterization of the Building 94 Settling Basin and is provided at the end of Section 5.4.12. The MEC presence is discussed below.

5.4.4.1. Known MEC Areas

There are no known MEC areas associated with the site.

5.4.4.2. Suspected MEC Areas

UXO and DMM are not suspected. However, there is a possibility for explosive subsurface soils (i.e., MC concentrations in soil greater than 10%) to be present in the settling basin below the currently graded agricultural field.

5.4.4.3. Areas Not Suspected to Contain MEC

The settling basin is suspected to contain MC.

5.4.5. Ordnance Penetration Estimates

No munitions were known to have been processed in the settling basin. It is unknown if MC disposed of in the settling basin create subsurface explosives soil conditions (i.e., explosive MC concentrations greater than 10%) in the former settling basin. Explosive MC concentrations in soil potentially exist from the former surface of the settling basin, which was 2 to 3 feet bgs.

5.4.6. MC

Small amounts of spillage were reported for smokeless powder inside Building 94, which was then drained to the settling basin. In addition, analytical sampling of floor drains inside Building 94 reported below hazard threshold concentrations of RDX, HMX, and picrate (NAVFACSW, 2005).

5.4.7. Contaminant Migration Routes

UXO and DMM are not known or suspected to be present. MC are not suspected in surface soil; however, MC are potentially present in the root zone of subsurface soil. MC in subsurface soil may migrate by plant and animal uptake of MC into the food web or by physical migration (e.g., earth moving associated with future construction, excavation, or maintenance at the site). MC can potentially leach from soil to groundwater in the shallow alluvial aquifer. A detailed CSM of migration and exposure pathways is presented in Section 5.4.11.

5.4.8. Receptors

Human receptors include Navy personnel, contractors (including maintenance and environmental), Navy-escorted visitors, and farmers. Ecological receptors (biota) are also potential receptors.

5.4.8.1. Nearby Populations

Population data for NAVWPNSTA Seal Beach and its vicinity are provided in Section 5.1.8.1.

5.4.8.2. Buildings Near/Within Site

Building 94 and its associated paint locker, smoke shack, and equipment storage buildings are located immediately east of the site.

5.4.8.3. Utilities On/Near Site

There or no utilities located on the Building 94 Settling Basin site. However, two external lighting poles are located just beyond the site's boundaries, one to the northwest and one to the southwest.

5.4.9. Land Use

Building 94 and the associated settling basin are no longer in use. The former settling basin has been graded over and has been used for agriculture out-lease in the past. The basin has not been used for agricultural purposes since fall 2008. Agriculture is a potential future land use if no MEC hazard is found at the site. Additionally, Building 94, adjacent to the site, will likely be demolished (NSWC Indian Head, 2003).

5.4.10. Access Controls/Restrictions

The Building 94 Settling Basin is located on NAVWPNSTA Seal Beach, which is a fenced and guarded installation. Security Forces personnel are responsible for maintaining law and order and for implementing access control policies and procedures. Access to the Building 94 Settling Basin from within NAVWPNSTA Seal Beach is controlled by vehicular security patrol; the site is unfenced.

5.4.11. CSM

This CSM was developed following guidance documents issued by the USEPA for hazardous waste sites and the USACE for ordnance and explosive sites. Guidance documents include the USEPA's *Guidance for Conducting Remedial Investigations and Feasibility Studies under CERCLA* (EPA/540/G-89/004) and the *Final USACE CSM Guidance Development of Integrated Conceptual Site Models for Environmental Ordnance and Explosives Sites* (USACE, 2003).

The CSM describes the site and its environmental setting. The CSM presents information regarding: 1) MEC and/or MC known or suspected to be at the site; 2) current and future reasonably anticipated or proposed uses of the real property; and 3) actual, potentially complete, or incomplete exposure pathways linking them. The CSM is the basis for the prioritization and remediation cost estimate.

The CSM is presented in a series of information profiles that provide information about the site. The information profiles are included in Table 5.4-1.

Table 5.4-1: CSM Information Profiles – Building 94 Settling Basin

Profile Type	Information Needs	PSI Findings
Range/Site Profile	Installation Name	NAVWPNSTA Seal Beach
	Installation Location	NAVWPNSTA Seal Beach is located in the city of Seal Beach in Orange County, California, approximately 26 miles south of the Los Angeles urban center and 8 miles east of Long Beach.
	Range/Site Name	Building 94 Settling Basin
	Range/Site Location	The Building 94 (cartridge case loading and breakdown facility) and its associated former Settling Basin are located east of Case Road in the central portion of the installation.
	Range/Site History	Building 94 was commissioned in 1945 and operated until approximately 1981 to load and break down 20-mm, 40-mm, 3-inch, and 5-inch projectiles with smokeless powder.
	Range/Site Area and Layout	The Building 94 Settling Basin occupies less than 1 acre; it is 50 feet by 50 feet in size.
	Range/Site Structures	Building 94 and its associated paint locker, smoke shack, and equipment storage buildings
	Range/Site Boundaries	Map 2.1-1 shows the location of the site. N: Agricultural fields are to the north. The installation boundary is roughly 1.5 miles north of the site, where the installation is bordered by the city of Seal Beach. S: Agricultural fields are to the south, and the Seal Beach NWR is about 400 yards away. The installation boundary is located roughly 1.5 miles to the south. Beyond the installation boundary is the Orange County Flood Control Channel, which flows into Anaheim Bay and then the Pacific Ocean, and the city of the Huntington Beach. W: Building 94 is located adjacent to the site. The northern tip of the Seal Beach NWR is located nearby to the west.

Table 5.4-1: CSM Information Profiles – Building 94 Settling Basin		
Profile Type	**Information Needs**	**PSI Findings**
		The installation boundary is roughly 1 mile away, where the installation is bordered by the city of Seal Beach. E: Agricultural fields are to the east. The installation boundary is 1.5 miles to the east where the installation is bordered by the cities of Westminster and Huntington Beach.
	Range/Site Security	The Building 94 Settling Basin is located on NAVWPNSTA Seal Beach, which is a fenced and guarded installation. Security Forces personnel are responsible for maintaining law and order and for implementing access control policies and procedures. Access to the Building 94 Settling Basin from within NAVWPNSTA Seal Beach is controlled by vehicular security patrol; the site is unfenced.
Munitions/ Release Profile	Munitions Types	Building 94 was a processing facility for 20-mm, 40-mm, 3-inch, and 5-inch projectiles. No munitions were processed in the settling basin. However, wash water with MC disposed of in the settling basin may create subsurface explosives soil conditions (i.e., explosive MC concentrations greater than 10%).
	Maximum Probability Penetration Depth	No munitions were processed in the settling basin. Explosive MC concentrations in soil potentially exist from the former surface of the settling basin, which was 2 to 3 feet bgs.
	MEC Density	UXO and DMM are not suspected. However, explosive soils (i.e., MC concentrations in soil greater than 10%) potentially exist below grade in the former settling basin.
	MEC Scrap/Fragments	MEC debris is not suspected.
	Associated MC	Small amounts of spillage were reported for smokeless powder inside Building 94, which was then drained to the settling basin. In addition, analytical sampling of floor drains inside Building 94 reported below hazard threshold concentrations of RDX, HMX, and picrate in floor drains (NAVFACSW, 2005).
	Migration Routes / Release Mechanisms	UXO and DMM are not known or suspected to be present. MC are not suspected in surface soil; however, MC are potentially present in subsurface soil. MC in subsurface soil may migrate by plant and animal uptake of MC into the food web or by physical migration (e.g., earth moving associated with future construction, excavation, or maintenance at the site). MC can potentially leach from soil to groundwater in the shallow alluvial aquifer.

Table 5.4-1: CSM Information Profiles – Building 94 Settling Basin		
Profile Type	**Information Needs**	**PSI Findings**
Physical Profile	Climate	The climate at NAVWPNSTA Seal Beach is typical of the maritime subclimate within the prevailing California Mediterranean climate: mild winters, cool summers, high relative humidity, and frequent early morning clouds that lead to afternoon sunshine. The annual average temperature is 74°F. Summer average high temperatures range from 77°F to 84°F, and average lows range from 60°F to 65°F. Winters tend to be moderate, with highs typically 67°F and average lows ranging from 45°F to 47°F. Yearly precipitation averages 13 inches per year; February is the wettest month, averaging 3 inches per year, and July is the driest, averaging 0.02 inches per year (WRCC, n.d.). Periodically, the region will experience *El Niño* conditions, which tend to bring wetter winters to the area through heavy storms. Occasionally, strong dry northeasterly winds descend the mountain slopes in the fall, winter, and early spring months. The strongest winds that occur for the region are associated with the winter and spring storms off the Pacific Ocean (NAVFACSW, 2005).
	Topography	The site has flat terrain and is at an elevation of approximately 7 feet asl.
	Geology	Building 94 Settling Basin surficial geology is characterized by alluvial and coastal deposits (Qal) (NAVFACSW, 1998a).
	Soil	Soils at the site are predominantly clay and silt layers. The IAS and INRMP note the site to be near the transition between drained Bolsa silt loam and drained Bolsa silty clay loam (NEESA, 1985; NAVWPNSTA Seal Beach, 2007). Both soils occur on large alluvial fans and are moderately to slowly permeable with slow runoff and slight erosion hazard over bare level soil. The soils are moderately alkaline and calcareous to a depth of about 49 inches.
	Hydrogeology	Groundwater in the vicinity of the site is approximately 10 to 20 bgs (NEESA, 1985), and groundwater is reported to flow to the northeast; however, the direction may vary seasonally (NAVFACSW, 1999). Shallow groundwater is not used for drinking water or agricultural irrigation at NAVWPNSTA Seal Beach, although parts of the station do use groundwater for agricultural. Navy Well 2 is reported adjacent to the site and is roughly 725 feet deep. Lateral groundwater movement in the moderately permeable shallow aquifer at NAVWPNSTA Seal Beach is estimated to be several hundred feet per year (NEESA, 1985).

Table 5.4-1: CSM Information Profiles – Building 94 Settling Basin		
Profile Type	**Information Needs**	**PSI Findings**
	Hydrology	There are no permanent water bodies on site. Runoff is expected to be slow over level terrain, and surface water is expected to only intermittently pond and to infiltrate to groundwater. Surface water generally flows southwest following the topography of the installation.
	Vegetation	The site had been used as an agricultural cultivated field until fall 2008. To the west nearby are four acres of southern willow scrub and four acres of non-native annual grasses. To the southwest across from Case Road is wheatgrass grassland vegetation that grades into the coastal salt marsh vegetation of the Case Road POLB Mitigation Pond (NAVWPNSTA Seal Beach, 2007).
Land Use and Exposure Profile	Current Land Use	Building 94 and the associated settling basin are no longer in use. The former settling basin has been graded over and was used for agriculture crop growing. It has not been used for agricultural purposes since fall 2008.
	Current Human Receptors	Current human receptors include Navy personnel and contractors (including maintenance personnel) and Navy-escorted visitors.
	Current Activities (frequency, nature of activity)	The site is not currently used.
	Potential Future Land Use	Agriculture is a potential future land use if no MEC hazard is found at the site. Additionally, Building 94, adjacent to the site, will likely be demolished (NSWC, 2003), although this task is presently not funded (Ms. Tamashiro, pers. comm.).
	Potential Future Human Receptors	Future receptors are expected to be the same as current receptors.
	Potential Future Land Use Related Activities	Agriculture is a potential future land use if no MEC hazard is found at the site. Additional activities adjacent to the site likely include Building 94 demolition.
	Zoning / Land Use Restrictions	The site is part of a secure and active Navy base. There are no other known land use restrictions.

Table 5.4-1: CSM Information Profiles – Building 94 Settling Basin		
Profile Type	**Information Needs**	**PSI Findings**
	Demographics/Zoning	NAVWPNSTA Seal Beach has a combined workforce of 150 military personnel and 600 civilian personnel. Population data include the following (U.S. Census, 2000): • City of Seal Beach: 24,154 • City of Westminster: 88,207 • City of Huntington Beach: 189,594 • Orange County: 2,846,289
	Beneficial Resources	The 50-acre Case Road POLB Mitigation Pond is 400 yards to the southwest and is part of the Seal Beach NWR, which provides habitat for migratory birds and for other endangered, threatened, and sensitive species (NAVWPNSTA Seal Beach, 2007).
Ecological Profile	Habitat Type	The site is on graded formerly cultivated land. To the west of the site is four acres of southern willow scrub. The 50-acre Case Road POLB Mitigation Pond is 400 yards to the southwest and is part of the Seal Beach NWR.
	Degree of Disturbance	The site has been filled in and graded over. The site was used for agricultural crop growing until fall 2008.
	Ecological Receptors and Species of Special Concern	Reported mammals at the installation include various species of pocket gophers, voles, shrews, ground squirrels, Audubon's cottontail rabbit (*Sylvilagus audubonii*) and brush rabbit (*Sylvilagus bachmani*). Nineteen species of raptors are known to occur on NAVWPNSTA Seal Beach, nine of which are known to nest on the installation: red-tailed hawk (*Buteo jamaicensis*), Swainson's hawk (*Buteo swainsoni*), great-horned owl (*Bubo virginianus*), burrowing owl (*Athene cunicularia*), loggerhead shrike (*Lanius ludovicianus*), American kestrel (*Falco sparverius*), great blue heron (*Ardea herodias*), common raven (*Corvus corax*), and American crow (*Corvus brachyrhynchos*). The avian wildlife at the installation forages over a large area and potentially may inhabit the Building 94 Settling Basin site for short periods of time (NAVFACSW, 2005; NAVWPNSTA Seal Beach, 2007). Resident or migrant bird species listed by federal or state agencies, or both, as threatened or endangered include the following: • Belding's savannah sparrow (*Passerculus sandwichensis beldingi*) • California brown pelican (*Pelecanus occidentalis californicus*)

Table 5.4-1: CSM Information Profiles – Building 94 Settling Basin		
Profile Type	**Information Needs**	**PSI Findings**
		• California least tern (*Sterna antillarum browni*) • Light-footed clapper rail (*Rallus longirostris levipes*) • Western snowy plover (*Charadrius alexandrinus nivosus*) The breeding season for these shorebird and salt marsh species extends from approximately late January to mid-September. The California least tern occupies the Seal Beach NWR only during the breeding season with most of its food supply coming from the Seal Beach NWR during that period (NAVFACSW, 2005).
	Relationship of MEC/MC Sources to Habitat and Potential Receptors	UXO and DMM are not suspected at the site. However, ecological receptors may be exposed to MC that have been incorporated into the food chain (e.g., bioaccumulated in plants and animals). Various mammals and other animals that inhabit the area may come into contact with MC while burrowing, foraging, or nesting. They may also consume plants and/or prey that have bioaccumulated MC.

A key element of the CSM is the exposure pathway analysis, which brings together the information profiles about site conditions, MEC/MC status, and possible receptors into a complete picture. The exposure pathway analysis is critical for the CSM because it helps establish the hypothesis of the site and determines the potential course that MEC and/or MC take from a source to a receptor. Recommendations for the site are then based on the exposure pathway analysis, ranging from no further action to an SI.

For MEC, a complete or potentially complete exposure pathway must include the following components: 1) a source (e.g., locations where MEC are expected to be found); 2) access (e.g., controlled or uncontrolled access, items on the surface or within the subsurface); 3) an activity (e.g., nonintrusive grounds maintenance, intrusive construction); and 4) receptors (e.g., Navy personnel, construction workers, recreational users, authorized visitors). It is important to recognize that environmental mechanisms (e.g., erosion) and/or human intervention may result in the repositioning of MEC.

For MC, a complete or potentially complete exposure pathway must include the following components: 1) a source (e.g., locations where MC are expected to be found); 2) an exposure

medium (e.g., surface soil); 3) an exposure route (e.g., dermal contact); and 4) receptors (e.g., Navy personnel, construction workers, recreational users, authorized visitors). If the point of exposure is not at the same location as the source, the pathway may also include a release mechanism (e.g., erosion) and a transport medium (e.g., surface water).

The potential interactions between the source and receptors are assessed differently for MEC and MC. For MEC, interaction between the potential receptors and an MEC source has two components. The receptor must have access to the source and must engage in some activity that results in contact with individual MEC items within the source area. For MC, interaction between the source and receptors involves a release mechanism for the MC, an exposure medium that contains the MC, and an exposure route that places the receptor into contact with the contaminated medium.

A graphical illustration of the details of the CSM is included in Figure 5.4-4 and Figure 5.4-5.

MEC Interactions and Pathway Analysis

UXO and DMM are not suspected. However, explosive concentrations of MC are potentially present in subsurface soil. The release mechanism of intrusive activities (e.g., subsurface sampling, construction) creates a potentially complete subsurface MC at explosive concentration exposure pathway for human receptors at the site. Surface explosive soil conditions are not suspected given that the settling basin was originally below grade and the site has been plowed for agriculture without incident. MEC exposure pathways for biota are also evaluated to be incomplete as biota cannot provide sufficient activation energy to ignite MC.

MC Interactions and Pathway Analysis

Potential receptors include both humans and biota that may be exposed to MC in the source medium. For MC, there is a potential release mechanism for MC (e.g., physical migration, uptake into the food web), an exposure medium containing the MC (e.g., soil), and a potential exposure route (e.g., incidental ingestion, dermal contact, inhalation) that places the receptor into contact with the contaminated medium. Pathways for surface water / sediment and for soil are discussed below.

Surface Water / Sediment

There are no surface water sources within the Building 94 Settling Basin site boundary. The nearest surface water source is the Case Road POLB 50-acre mitigation pond 400 yards away. Consequently, all exposure pathways to humans and biota are evaluated as incomplete.

Soil

MC are not suspected in surface soil. MC in subsurface soil may migrate by physical migration (e.g., earth moving associated with future construction, excavation, or maintenance at the site) or by leaching. Release mechanisms for MC in soil with potentially complete pathways include plant and animal uptake and physical migration. Human receptors may come in contact with MC in subsurface soil during construction/demolition (e.g., Building 94 demolition) or environmental work (e.g., drilling and soil sampling). Exposure routes include ingestion of and dermal contact with soil and inhalation of subsurface dust generated during earth moving activities. Biota receptors may come in contact with MC in subsurface soil by plant uptake of MC through roots or through dermal contact or incidental soil ingestion while burrowing, foraging, or nest building. Similar to humans, inhalation of MC impacted dust is possible from during earth moving activities. MC in soil can potentially bioaccumulate in biota that uptake MC at the site.

Groundwater

The release mechanism of leaching to groundwater is possible; however, shallow groundwater is not used for drinking water or irrigation on NAVWPNSTA Seal Beach so direct pathways to humans are incomplete. MC can potentially leach from soil to groundwater in the shallow alluvial aquifer; because shallow groundwater is tidally influenced and flows into the salt water marshes at the installation, there is a potentially complete pathway between MC in shallow groundwater and biota in the marshes. The deep aquifers at the installation are too deep for direct exposure by humans, plants, or animals. Also, NAVWPNSTA Seal Beach production wells are greater than 600 feet bgs.

Inhalation due to MC volatilization for all source media except soil is evaluated to be incomplete based on the low volatility of the MC of concern (i.e., metals, explosives) and the open unconfined environment of the site.

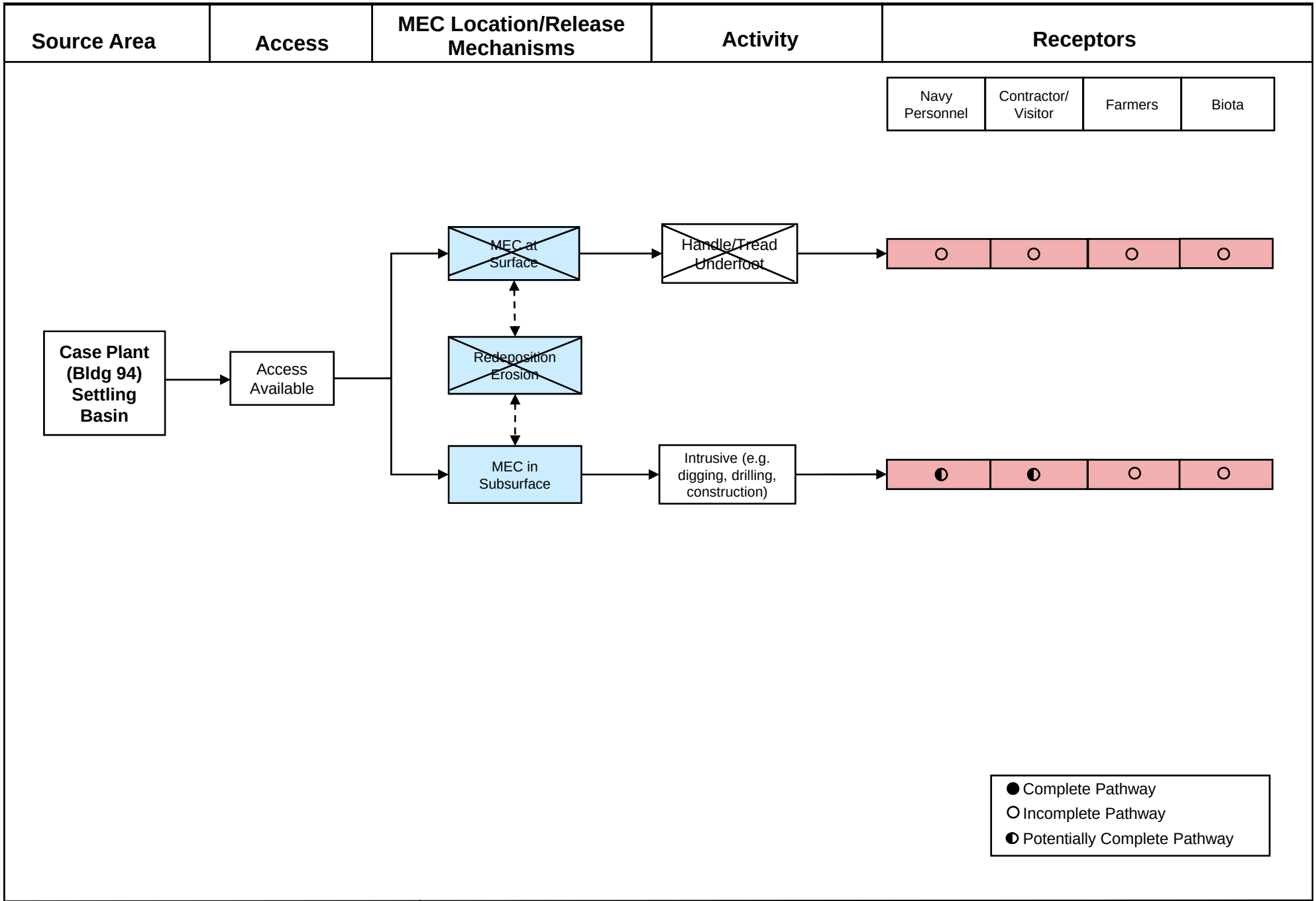

MALCOLM PIRNIE

Prepared for:

PRELIMINARY SITE INSPECTION – DRAFT FINAL PSI REPORT
BUILDING 94 SETTLING BASIN – MEC EXPOSURE PATHWAY ANALYSIS
NAVWPNSTN SEAL BEACH, CALIFORNIA

MALCOLM PIRNIE, INC.

Figure 5.4-4
December 2008

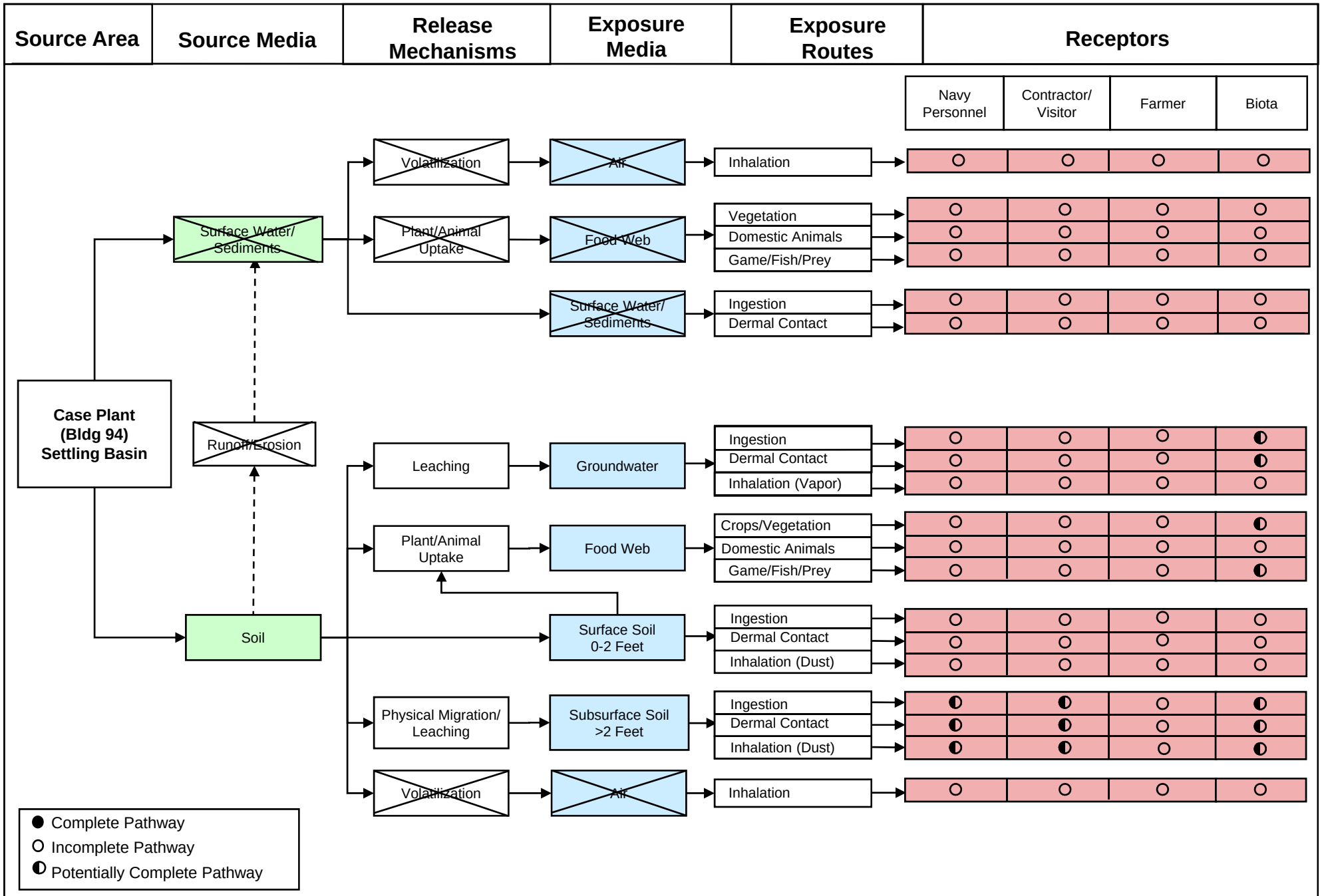

MALCOLM PIRNIE

Prepared for:

PRELIMINARY SITE INSPECTION – DRAFT FINAL PSI REPORT
BUILDING 94 SETTLING BASIN – MC EXPOSURE PATHWAY ANALYSIS
NAVWPNSTA SEAL BEACH, CALIFORNIA

MALCOLM PIRNIE, INC.

Figure 5.4-5
December 2008

5.4.12. Summary

Building 94 was commissioned in 1945 and operated until approximately 1981 for the loading and break down of 20-mm, 40-mm, 3-inch, and 5-inch projectiles (NEESA, 1985). The interior of Building 94 (floor, walls, and ceiling) occasionally was washed down with water to prevent smokeless powder dust accumulation, and the wash water drained through floor drains. In 2003, analytical sampling from inside Building 94 reported below hazard threshold concentrations of RDX, HMX, and picrate in floor drains (NSWC Indian Head, 2003). Based on engineering diagrams, it appears as if the floor drains drained to a 50-foot-by-50-foot settling basin to the east of Building 94. The former settling basin is no longer visible, and its location is currently graded and was cultivated for agriculture until fall 2008. The settling basin is not suspected to contain UXO or DMM. However, there is a possibility for explosive soils (i.e., MC concentrations in soil greater than 10%) to be present in the former settling basin below the graded former agricultural field. Based on site history, potentially complete MEC and MC exposure pathways are present.

This page intentionally is blank.

Draft Final Preliminary Site Inspection
NAVWPNSTA Seal Beach, California

MALCOLM PIRNIE

Map 5.4-1
Visual Survey
Building 94 Settling Basin

Legend

- Installation Boundary
- MRP Sites
- Site Reconnaissance

0 25 50 100 Meters

Data Source: NAVWPNSTA Seal Beach Aerial, GIS Data, 2007

Coordinate System: UTM, Zone 11N
Datum: NAD 83
Units: meters

Contract: N62472-02-D-1300
Edition: Draft Final Preliminary Site Inspection
Date: December 2008

This page intentionally is blank.

Draft Final Preliminary Site Inspection
NAVWPNSTA Seal Beach, California

MALCOLM PIRNIE

Map 5.4-2
Range/Site Details
Building 94 Settling Basin

Legend

- Installation Boundary
- MRP Sites
- Contours (2-ft interval)

0 25 50 100 Meters

Data Source: NAVWPNSTA Seal Beach Aerial, GIS Data, 2007

Coordinate System: UTM, Zone 11N
Datum: NAD 83
Units: meters

Contract: N62472-02-D-1300
Edition: Draft Final Preliminary Site Inspection
Date: December 2008

NAVWPNSTA Seal Beach, California

Building 94 Settling Basin

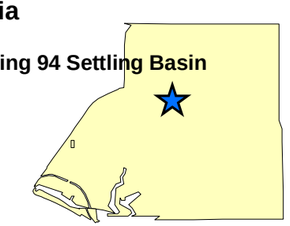

This page intentionally is blank.

Draft Final Preliminary Site Inspection
NAVWPNSTA Seal Beach, California

MALCOLM PIRNIE

Map 5.4-3
Munitions Characterization
Building 94 Settling Basin

Legend

Installation Boundary

MRP Sites

MEC Presence*

Known

Suspect

*MEC Presence was determined through review of historical documentation, interviews, and visual survey.

0 25 50 100 Meters

Data Source: NAVWPNSTA Seal Beach Aerial, GIS Data, 2007

Coordinate System: UTM, Zone 11N
Datum: NAD 83
Units: meters

Contract: N62472-02-D-1300
Edition: Draft Final Preliminary Site Inspection
Date: December 2008

This page intentionally is blank.

5.5. Explosives Drop Test Tower (Building 436)

5.5.1. History and Site Description

The Explosives Drop Test Tower (Building 436) is located at the southern terminus of 7th Street near the southern bank of the 7th Street POLB Mitigation Pond and within the Seal Beach NWR. IRP Site 24 (Quench Water Disposal Area) is located in a low-lying area adjacent to the north, and IRP Site 6 (Explosives Burning Ground) is located approximately 500 feet to the east at the end of 7th street.

The Explosives Drop Test Tower was used from 1955 to 1977, in conjunction with former Buildings 435 and 437 (both located 80 feet to the east), to test experimental propellants. The building complex, referred to as the Rocket Test Facility, was used to test experimental propellants and consisted of a grenade observation area, a firing block for 90-mm to 105-mm rockets, and a partial burning room that drained waste quenching (i.e., deluge) water to IRP Site 24 (Static Rocket Firing Test Facility Bldg. Floor Plan (QE-10) 437, 1954; NEESA, 1985).

Engineering diagrams show that the Explosives Drop Test Tower is 50 feet high. Ordnance was dropped from the center of the tower into a 2.5-foot-square-by-6-foot-high thick metal box with a door. The bottom of the steel box was reinforced with a below-ground 4-inch-thick armor plate block on top of a 3-foot-thick concrete block. Based on the engineering diagram, a small ball type object the size of a large grenade was dropped into the steel box (QE Laboratory, Steel Drop Test Tower 436 (QE-10b), 1956). The only reported use of the tower was to drop test 1.4 (minor explosion hazard) cartridges for safety testing (Mr. Ball, pers. comm.).

The low-lying salt marsh area to the north of and adjacent to the Explosives Drop Test Tower was used for the disposal of waste quenching water containing RDX (NEESA, 1985); the marsh was investigated as IRP Site 24 in 1990. IRP Site 24 was sampled for explosives, including HMX and RDX (Figure 5.5-1). Because no explosives were detected, IRP Site 24 was recommended for no further action. However, the area underneath the Explosives Drop Test Tower has not been evaluated. During the 1990 SI Technical Report field survey, a detonator cap was observed south of Building 435 (NAVFACSW, 1990).

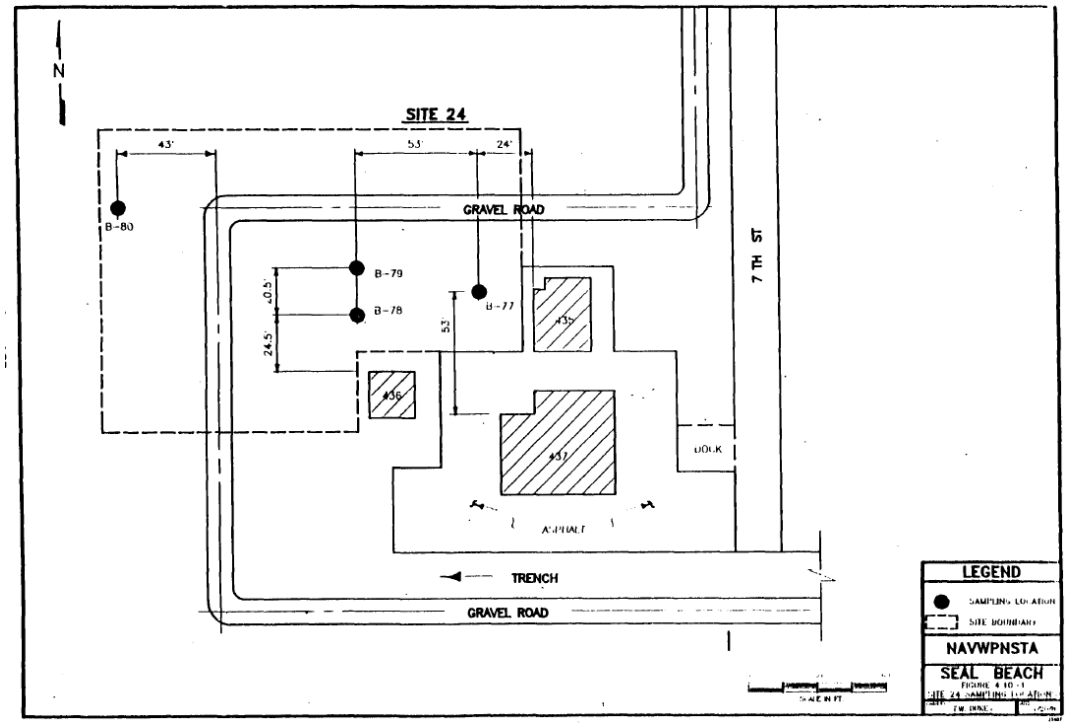

Figure 5.5-1: Sampling locations for IRP Site 24 noted in the SI Final Report
Source: (NAVFACSW, 1990)

5.5.1.1. Topography

The Explosives Drop Test Tower terrain is flat and at an elevation of 5 feet asl (POLB Diagram, 1986). For additional information on the topography of NAVWPNSTA Seal Beach, see Section 3.2.

5.5.1.2. Geology

Explosives Drop Test Tower surficial geology is characterized by alluvial and coastal deposits (Qal) (NAVFACSW, 1998a). Section 3.3 includes a more detailed description of the geology of NAVWPNSTA Seal Beach.

5.5.1.3. Soil and Vegetation Types

Surface soil at the site is largely composed of what appears to be soil with gravel fill. Subsurface soil is expected to be predominantly clay and silt layers. The IAS and INRMP note the area to be characterized by drained Bolsa silty clay loam, which occurs on large alluvial fans and is moderately to slowly permeable (NEESA, 1985; NAVWPNSTA Seal Beach, 2007). Runoff is slow over bare level soil, and the erosion hazard is slight. The soil is moderately alkaline and

calcareous to a depth of about 49 inches (NEESA, 1985). Section 3.4 includes a general description of the soil types at NAVWPNSTA Seal Beach.

Low grasses, pickleweed (*Salicornia spp.*), and a few large bushes are present at the site. The Explosives Drop Test Tower is surrounded on three sides by the Seal Beach NWR wetland. Section 3.4 includes a general description of the vegetation types at NAVWPNSTA Seal Beach.

5.5.1.4. Hydrology

There are no permanent water bodies on site, although water will pond intermittently in the low-lying depression immediately to the north of the Explosives Drop Test Tower (IRP Site 24). Surface water is expected to be contained within the roughly 3-acre area surrounding the Explosives Drop Test Tower. The area surrounding the site is coastal wetland, part of the Seal Beach NWR. Section 3.5 includes a general description of the hydrology of NAVWPNSTA Seal Beach.

5.5.1.5. Hydrogeology

Groundwater at the site is near surface depths (less than 5 feet bgs) and is tidally influenced. Groundwater is reported to flow to the northeast toward the 7th Street POLB wetland (NAVFACSW, 1999). Because of salt-water intrusion, groundwater at the site is saline to brackish and is not used for drinking water (NAVFACSW, 2002). Lateral groundwater movement in the moderately permeable shallow aquifer at NAVWPNSTA Seal Beach is estimated to be several hundred feet per year (NEESA, 1985). The closest reported well is Navy Well 3 located 0.75 miles north at the intersection with Bolsa Avenue and Devlin Road (Ms. Tamashiro, pers. comm.). Navy Well 3 currently is used for agricultural irrigation and is screened at a depth of 615 feet bgs (Ms. Tamashiro, pers. comm.). Section 3.6 includes a general description of the hydrogeology of NAVWPNSTA Seal Beach.

5.5.1.6. Cultural and Natural Resources

There are no known significant cultural resources within or adjacent to the site (NAVFACSW, 2002; COUP Incorporated, n.d.). Great blue herons, which are protected under the U.S. Migratory Bird Treaty Act, use the Explosives Drop Test Tower as a nesting site (NAVWPNSTA Seal Beach, 2007). Section 3.7 includes a description of the cultural and natural resources of NAVWPNSTA Seal Beach.

5.5.1.7. Endangered and Special Status Species

Federally listed endangered or threatened species are documented as present in the Seal Beach NWR. The species include the California brown pelican (*Passerculus sandwichensis beldingi*), California least tern (*Sterna antillarum browni*), light-footed clapper rail (*Rallus longirostris levipes*), and the Western snowy plover (*Charadrius alexandrinus nivosus*) (NAVWPNSTA Seal Beach, 2007; CDFG, 2007). Additional information on species of concern for NAVWPNSTA Seal Beach is presented in Section 3.8.

5.5.2. Visual Survey Observations and Results

A visual survey of the Explosive Drop Test Tower was conducted on 15 November 2007. During the visual survey, the following Malcolm Pirnie team members were present: Ms. Caruso (Team Leader), Mr. Schulman, Mr. Storrs (UXOSS), Ms. Gerritzen, and Mr. Asakawa. The following Navy representatives were present during the visual survey: Ms. Tamashiro. The field team visually surveyed 100% of the site.

During the site visit, the Explosives Drop Test Tower was inactive, unfenced, and largely free of debris, other than scattered pieces of scrap metal and wood. The former concrete building foundations for Buildings 435 and 437 and their decomposing asphalt driveways were still present adjacent to the site. In the center below the Explosives Drop Test Tower was an approximately 2.5-foot-square-by-6-foot-high open-topped metal box with a broken door on one side (Figure 5.5-2). Signs posted on the tower read “40 Ft Drop Tester - Guided or Free Fall” and “Hazardous Test Area - Authorized Personnel Only - Hard Hat Required.” A great blue heron nest was observed in the top balcony of the tower. No other buildings were observed within the site boundaries, although a group of small empty magazine bunkers were located 250 feet to the east. The groundcover consisted of bare earth to low grasses, pickleweed (*Salicornia spp.*), and a few large bushes. The low-lying area adjacent to the Explosives Drop Test Tower (IRP Site 24) was observed to have several inches of standing water. The area surrounding the Explosives Drop Test Tower was bermed, forming a barrier to surface water migration between the surrounding POLB Mitigation Pond and Seal Beach NWR wetland areas (Figure 5.5-3)

Figure 5.5-2: View of the west side of the Explosives Drop Test Tower
(Photograph was taken during the November 2007 on-site visual survey.)

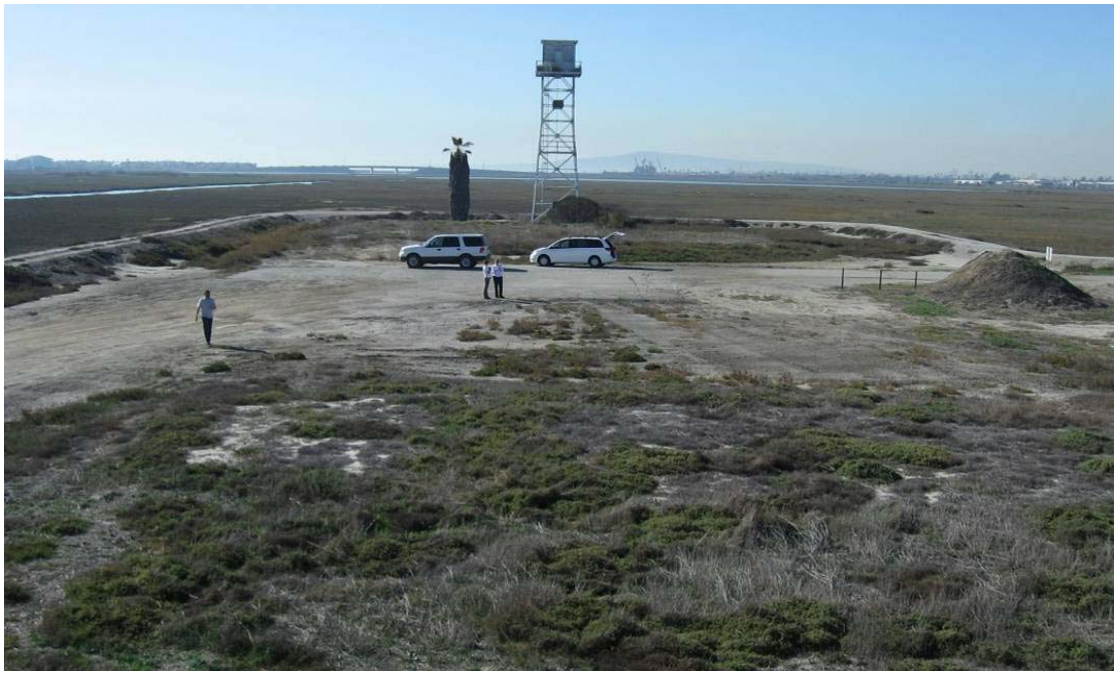

Figure 5.5-3: View of the east side of the Explosives Drop Test Tower and bermed surroundings
(Photograph was taken during the November 2007 on-site visual survey.)

A visual depiction of the site reconnaissance is provided on Map 5.5-1 located at the end of Section 5.5. Additional site details are illustrated on Map 5.5-2, also located at the end of Section 5.5.

5.5.3. Munitions and Munitions Related Materials Associated with the Site

This section describes the munitions or munitions related materials known or suspected to be at the site, including the types and estimated maximum penetration depths. This includes both MEC and nonhazardous munitions related scrap.

The exact types of munitions used at the Explosives Drop Test Tower are unknown. It has been reported that the tower was used to drop test 1.4 (minor explosion hazard) cartridges for safety testing (Mr. Ball, pers. comm.). Engineering diagrams indicate that a small ball type object the size of a large grenade was dropped into the steel box below the tower (Quality Evaluation Laboratory, Steel [QE-10b] 436 Drop Test Tower, 1956).

Based on the information obtained during the data collection process, the site is not known or suspected to contain CWM filled munitions, electrically fuzed munitions, or DU associated munitions.

5.5.4. MEC Presence

The entire site has been subdivided and categorized into one of three levels of MEC presence, including: known MEC areas, suspected MEC areas, and areas not suspected to contain MEC. Known MEC areas are those areas where MEC were found in the past, a removal of MEC was conducted, EOD responses occurred at the site, or MEC were found during the site visit. Suspected MEC areas are those areas where no MEC have been found at the site; however, training or disposal may have occurred at the site, historical documents indicate MEC may be present, or there is the potential for MEC to be found at the site. Areas not suspected to contain MEC are those where full removals have occurred or no records have been found of munitions being used at the site.

Map 5.5-3 illustrates the munitions characterization of the Explosives Drop Test Tower and is provided at the end of Section 5.5. The MEC presence is discussed below.

5.5.4.1. Known MEC Areas

There are no known MEC areas associated with the site.

5.5.4.2. Suspected MEC Areas

There are no suspected MEC areas associated with the site.

5.5.4.3. Areas Not Suspected to Contain MEC

The entire Explosives Drop Test Tower site is not suspected to contain MEC based on the historical use of the Explosives Drop Test Tower. Explosive items were used under controlled testing situations and would have been accounted for during use. In addition, no indications of MEC related items were observed during the site visit.

5.5.5. Ordnance Penetration Estimates

The bottom of the Explosives Drop Test Tower was reinforced with a below-ground 4-inch-four-inch thick armor plate block on top of a 3-foot-thick concrete block. Consequently, subsurface MEC are not expected and penetration depths are not evaluated.

5.5.6. MC

MC of concern would be metals and explosives from the testing of munitions items at the Explosives Drop Test Tower. However, the Explosives Drop Test Tower and surrounding area has not been sampled for MC. Soil samples from IRP Site 24, the closest low-lying area adjacent to the Explosives Drop Test Tower, were nondetect for explosives (NAVFACSW, 1990).

5.5.7. Contaminant Migration Routes

MEC are not expected to be present at the site; consequently, MEC migration and release mechanisms are not evaluated. Migration of MC, if present, may occur through soil pathways that include plant and animal uptake and physical migration of MC to subsurface soil. MC in surface soil can potentially leach through soil to groundwater in the shallow alluvial aquifer; however, this aquifer is not used at NAVWPNSTA Seal Beach. A detailed CSM of migration and exposure pathways is presented in Section 5.5.11.

5.5.8. Receptors

MEC and MC are not expected to be present at the site; consequently, receptor pathways are not evaluated.

5.5.8.1. Nearby Populations

Population data for NAVWPNSTA Seal Beach and its vicinity are provided in Section 5.1.8.1.

5.5.8.2. Buildings Near/Within Site

The site consists entirely of Building 436 (i.e., the Explosives Drop Test Tower). Several currently unused storage magazines and the foundations of former Buildings 432 through 437 are located nearby to the east.

5.5.8.3. Utilities On/Near Site

There are no utilities located on the Explosives Drop Test Tower site.

5.5.9. Land Use

The Explosives Drop Test Tower currently is used as a nesting platform for herons (NAVWPNSTA Seal Beach, 2007). The site is located within the Seal Beach NWR, which provides sensitive species habitat.

5.5.10. Access Controls/Restrictions

The Explosives Drop Test Tower is unfenced and located on NAVWPNSTA Seal Beach, which is a fenced and guarded installation. Security Forces personnel are responsible for maintaining law and order and for implementing access control policies and procedures. Access to the Explosives Drop Test Tower from within NAVWPNSTA Seal Beach is controlled by vehicular security patrol. In addition, the site is surrounded on three sides with Seal Beach NWR wetlands and tidal areas.

5.5.11. CSM

This CSM was developed following guidance documents issued by the USEPA for hazardous waste sites and the USACE for ordnance and explosives sites. Guidance documents include the USEPA's *Guidance for Conducting Remedial Investigations and Feasibility Studies under*

CERCLA (EPA/540/G-89/004) and the *Final USACE CSM Guidance Development of Integrated Conceptual Site Models for Environmental Ordnance and Explosives Sites* (USACE, 2003).

The CSM describes the site and its environmental setting. The CSM presents information regarding: 1) MEC and/or MC known or suspected to be at the site; 2) current and future reasonably anticipated or proposed uses of the real property; and 3) actual, potentially complete, or incomplete exposure pathways linking them. The CSM is the basis for the prioritization and remediation cost estimate.

The CSM is presented in a series of information profiles that provide information about the site. The information profiles are included in Table 5.5-1.

Table 5.5-1: CSM Information Profiles – Explosives Drop Test Tower

Profile Type	Information Needs	PSI Findings
Range/Site Profile	Installation Name	NAVWPNSTA Seal Beach
	Installation Location	NAVWPNSTA Seal Beach is located in the city of Seal Beach in Orange County, California, approximately 26 miles south of the Los Angeles urban center and 8 miles east of Long Beach.
	Range/Site Name	Explosives Drop Test Tower (Building 436)
	Range/Site Location	The Explosives Drop Test Tower is located at the southern terminus of 7th Street.
	Range/Site History	The exact types of munitions used at the Explosives Drop Test Tower are unknown. It has been reported that the tower was used to drop test 1.4 (minor explosion hazard) cartridges for safety testing.
	Range/Site Area and Layout	The Explosives Drop Test Tower is 11-feet-by-11-feet within an approximate one-quarter-acre flat area surrounded by a 4-foot berm. A low-lying area (IRP Site 24) is immediately to the northeast.
	Range/Site Structures	The site consists entirely of Building 436 (Explosives Drop Test Tower).
	Range/Site Boundaries	Map 2.1-1 shows the location of the site. N: A 4-foot high berm is located 100 feet to the north and acts a boundary for the Seal Beach NWR wetland area. The installation boundary is roughly 2.75 miles north of the site

Table 5.5-1: CSM Information Profiles – Explosives Drop Test Tower		
Profile Type	**Information Needs**	**PSI Findings**
		where the installation is bordered by the city of Seal Beach. S: A 4-foot high berm is located 100 feet to the south and acts as a boundary for the Seal Beach NWR wetland area. The installation boundary is located one-quarter mile to the south. Beyond the installation boundary is the Orange County Flood Control Channel, which flows into Anaheim Bay and then the Pacific Ocean, and the city of the Huntington Beach. W: A 4-foot high berm is located 50 feet to the west and acts as a boundary for the Seal Beach NWR wetland area. The installation boundary is 1 mile to the west, where the installation is bordered by the city of Seal Beach. E: The former Buildings 432-437 complex was located 80 feet to the east. Mostly bare earth extends 400 to 500 feet from the former complex to a 4-foot high soil berm that separates the area from IRP Site 6 and the Seal Beach NWR. The installation boundary is roughly 1.5 miles away where the installation is bordered by the city of Huntington Beach.
	Range/Site Security	The Explosives Drop Test Tower is unfenced and located on NAVWPNSTA Seal Beach, which is a fenced and guarded installation. Security Forces personnel are responsible for maintaining law and order and for implementing access control policies and procedures. Access to the Explosives Drop Test Tower from within NAVWPNSTA Seal Beach is controlled by vehicular security patrol. In addition, the site is surrounded on three sides by Seal Beach NWR.
Munitions/ Release Profile	Munitions Types	1.4 (minor explosion hazard) cartridges were tested at the Explosives Drop Test Tower.
	Maximum Probability Penetration Depth	Subsurface MEC are not suspected, as the bottom of the Explosives Drop Test Tower was reinforced with a below-ground 4-inch-thick armor plate block that rested on top of a 3-foot-thick concrete block. Consequently, MEC penetration depths are not of concern.
	MEC Density	MEC presence is unlikely and not suspected.
	MEC Scrap/Fragments	The Explosives Drop Test Tower is not suspected to contain MEC based on the historical use of the Explosives Drop Test Tower. No MEC scrap was observed during the visual survey.

Table 5.5-1: CSM Information Profiles – Explosives Drop Test Tower		
Profile Type	**Information Needs**	**PSI Findings**
	Associated MC	MC associated with the Explosives Drop Test Tower includes metals and explosives. Soil samples from IRP Site 24, the closest low-lying area and adjacent to the tower, were nondetect for explosives (NAVFACSW, 1990).
	Migration Routes / Release Mechanisms	MEC and MC are not known or suspected to be present. If present, MC may migrate through soil pathways that include plant and animal uptake and physical migration of MC to subsurface soil. MC in surface soil can potentially leach through soil to groundwater in the shallow alluvial aquifer; however, this aquifer is not used at NAVWPNSTA Seal Beach.
Physical Profile	Climate	The climate at NAVWPNSTA Seal Beach is typical of the maritime subclimate within the prevailing California Mediterranean climate: mild winters, cool summers, high relative humidity, and frequent early morning clouds that lead to afternoon sunshine. The annual average temperature is 74°F. Summer average high temperatures range from 77°F to 84°F, and average lows range from 60°F to 65°F. Winters tend to be moderate, with highs typically 67°F and average lows ranging from 45°F to 47°F. Yearly precipitation averages 13 inches per year; February is the wettest month, averaging 3 inches per year, and July is the driest, averaging 0.02 inches per year (WRCC, n.d.). Periodically, the region will experience *El Niño* conditions, which tend to bring wetter winters to the area through heavy storms. The prevailing winds are westerly with an average velocity of 10 knots; occasional strong dry northeasterly winds descend the mountain slopes in the fall, winter, and early spring months (NAVFACSW, 1979). The strongest winds that occur for the region are associated with the winter and spring storms off the Pacific Ocean (NAVFACSW, 2005).
	Topography	The Explosives Drop Test Tower terrain is flat and at an elevation of 5 feet asl (POLB Diagram, 1986).
	Geology	Explosives Drop Test Tower (Building 436) surficial geology is characterized by alluvial and coastal deposits (Qal) (NAVFACSW, 1998a).

Table 5.5-1: CSM Information Profiles – Explosives Drop Test Tower		
Profile Type	**Information Needs**	**PSI Findings**
	Soil	Surface soil at the site is largely composed of what appears to be soil with gravel fill. Subsurface soil is expected to be predominantly clay and silt layers. The IAS and INRMP note the area to be characterized by drained Bolsa silty clay loam, which occurs on large alluvial fans and is moderately to slowly permeable (NEESA, 1985; NAVWPNSTA Seal Beach, 2007). Runoff is slow over bare level soil, and the erosion hazard is slight. The soil is moderately alkaline and calcareous to a depth of about 49 inches (NEESA, 1985).
	Hydrogeology	Groundwater at the site is near surface depths and is tidally influenced. Groundwater is reported to flow to the northeast toward the 7th Street POLB Mitigation Pond (NAVFACSW, 1999). Because of salt-water intrusion, groundwater at the site is saline to brackish and is not used for drinking water (NAVFACSW, 2002). Lateral groundwater movement in the moderately permeable shallow aquifer at NAVWPNSTA Seal Beach is estimated to be several hundred feet per year (NEESA, 1985). The closest reported well is Navy Well 3 located 0.75 miles north at the intersection of Bolsa Avenue and Devlin Road. Navy Well 3 currently is used for agricultural irrigation and is screened at a depth of 615 feet bgs (Ms. Tamashiro, pers. comm.). Lateral groundwater movement in the moderately permeable shallow aquifer at NAVWPNSTA Seal Beach is estimated to be several hundred feet per year (NEESA, 1985).
	Hydrology	Surface water from the site would be contained within the roughly 3-acre bermed area surrounding the Explosives Drop Test Tower.
	Vegetation	Low grasses, pickleweed (*Salicornia spp.*), and a few large bushes are present at the site.
Land Use and Exposure Profile	Current Land Use	The Explosives Drop Test Tower vicinity is no longer in use other than as a nesting platform for herons (NAVWPNSTA Seal Beach, 2007).
	Current Human Receptors	MEC and MC are not expected to be present at the site; consequently, receptor pathways are not evaluated.
	Current Activities (frequency, nature of activity)	The Explosives Drop Test Tower is no longer in use. The only activities are infrequent site visits to conduct environmental and ecological surveys.

Table 5.5-1: CSM Information Profiles – Explosives Drop Test Tower		
Profile Type	**Information Needs**	**PSI Findings**
	Potential Future Land Use	Future land uses are expected to be the same as current use.
	Potential Future Human Receptors	MEC and MC are not expected to be present at the site; consequently, receptor pathways are not evaluated.
	Potential Future Land Use Related Activities	The Explosives Drop Test Tower will remain in place to accommodate heron nesting. NAVWPNSTA Seal Beach Environmental Division has plans to restore tidal flow by removing the road extending east from the Explosives Drop Test Tower and excavating tidal channels into the area (NAVWPNSTA Seal Beach, 2007).
	Zoning / Land Use Restrictions	The site is part of a secure and active Navy base and is located within the Seal Beach NWR. There are no other known land use restrictions.
	Demographics/ Zoning	NAVWPNSTA Seal Beach has a combined workforce of 150 military personnel and 600 civilian personnel. Population data include the following (U.S. Census, 2000): • City of Seal Beach: 24,154 • City of Westminster: 88,207 • City of Huntington Beach: 189,594 • Orange County: 2,846,289
	Beneficial Resources	The area provides habitat to potentially sensitive resources as the land is unused and part of the Seal Beach NWR. Herons, which are protected by the U.S. Migratory Bird Treaty Act, use t he Explosives Drop Test Tower for nesting (NAVWPNSTA Seal Beach, 2007).
Ecological Profile	Habitat Type	The site is characterized by low grasses to barren land with isolated shrubs. The site is located within the Seal Beach NWR.
	Degree of Disturbance	The site is unused, although the soil is largely composed of what appears to be soil with gravel fill.
	Ecological Receptors and Species of Special Concern	Reported mammals at the installation include various species of pocket gophers, voles, shrews, and ground squirrels, and Audubon's cottontail rabbit (*Sylvilagus audubonii*) and brush rabbit (*Sylvilagus bachmani*). Nineteen species of raptors are known to occur on NAVWPNSTA Seal Beach, nine of which nest on the installation: red-tailed hawk (*Buteo jamaicensis*), Swainson's hawk (*Buteo swainsoni*), great-horned owl (*Bubo virginianus*), burrowing owl (*Athene*

Table 5.5-1: CSM Information Profiles – Explosives Drop Test Tower		
Profile Type	**Information Needs**	**PSI Findings**
		cunicularia), loggerhead shrike (*Lanius ludovicianus*), American kestrel (*Falco sparverius*), great blue heron (*Ardea herodias*), common raven (*Corvus corax*), and American crow (*Corvus brachyrhynchos*). The avian wildlife using the installation forages over a large area and would spend relatively little time on site. Aquatic ecological receptors include marine invertebrates and fish, including the federally endangered tidewater goby (*Eucyclogobius newberryi*), which inhabit the Seal Beach NWR (NAVFACSW, 2005; NAVWPNSTA Seal Beach, 2007). The Explosives Drop Test Tower is an identified heron nesting site (NAVWPNSTA Seal Beach, 2007). Resident or migrant bird species listed by federal or state agencies, or both, as threatened or endangered include the following: • Belding's savannah sparrow (*Passerculus sandwichensis beldingi*) • California brown pelican (*Pelecanus occidentalis californicus*) • California least tern (*Sterna antillarum browni*) • Light-footed clapper rail (*Rallus longirostris levipes*) • Western snowy plover (*Charadrius alexandrinus nivosus*) The breeding season for these shorebird and salt marsh species extends from approximately late January to mid-September. The California least tern occupies the Seal Beach NWR only during the breeding season, but most of its food supply comes from the Seal Beach NWR during that period (NAVFACSW, 2005).
	Relationship of MEC/MC Sources to Habitat and Potential Receptors	MEC is not expected to be present at the site; therefore, migration and release mechanisms are not of concern. However, ecological receptors may be exposed to MC that have been incorporated into the food chain (e.g., bioaccumulated in plants and animals). Various mammals and other animals that inhabit the area may come into contact with MC while burrowing, foraging, or nesting. They may also consume plants and/or prey that have bioaccumulated MC.

A key element of the CSM is the exposure pathway analysis, which brings together the information profiles about site conditions, MEC/MC status, and possible receptors into a

complete picture. The exposure pathway analysis is critical for the CSM because it helps establish the hypothesis of the site and determines the potential course that MEC and/or MC take from a source to a receptor. Recommendations for the site are then based on the exposure pathway analysis, ranging from no further action to an SI.

MEC Interactions and Pathway Analysis

There are no known or suspected MEC associated with the Explosives Drop Test Tower. Consequently, no graphical MEC exposure analysis has been included.

MC Interactions and Pathway Analysis

Potential receptors include both humans and biota that may be exposed to MC in the source medium. For MC, there is a potential release mechanism for MC (e.g., physical migration, uptake into the food web), an exposure medium containing the MC (e.g., soil), and a potential exposure route (e.g., incidental ingestion, dermal contact, inhalation) that places the receptor into contact with the contaminated medium. Pathways for surface water / sediment and for soil are discussed below.

Surface Water / Sediment

There are no surface water bodies within the Explosives Drop Test Tower boundary. Consequently, all direct exposure pathways to humans and biota are evaluated as incomplete. However, the Seal Beach NWR wetlands are located adjacent to and likely receive runoff and erosion from the Explosives Drop Test Tower.

Soil

Release mechanisms for MC in soil with potentially complete pathways include leaching to groundwater, plant and animal uptake, physical migration, and leaching to subsurface soil. Human receptors may come in contact with MC in surface and/or subsurface soil during construction/demolition activities or environmental work (e.g., field surveys, drilling, and soil sampling). Exposure routes include incidental ingestion of and dermal contact with soil and inhalation of surface and subsurface dust generated by wind or during surface and subsurface earth moving activities. Biota receptors may come in contact with MC in surface and/or subsurface soil by plant uptake of MC or incidental soil ingestion while burrowing, foraging, or nest building. Similar to humans, inhalation of MC-impacted dust is possible from wind or earth moving activities. MC in soil can potentially bioaccumulate in biota that uptake MC at the site.

Groundwater

The release mechanism of leaching to groundwater is possible; however, shallow groundwater is not used for drinking water or irrigation on NAVWPNSTA Seal Beach so direct pathways to humans are considered incomplete. MC can potentially leach from soil to groundwater in the shallow alluvial aquifer; because shallow groundwater is tidally influenced and flows into the salt water marshes at the installation, there is a potentially complete pathway between MC in shallow groundwater and biota in the marshes. The deep aquifers at the installation are too deep for direct exposure by humans, plants, or animals; NAVWPNSTA Seal Beach production wells are greater than 600 feet bgs.

Inhalation due to MC volatilization for all source media except soil is evaluated to be incomplete based on the low volatility of the MC of concern (i.e., metals, explosives) and the open unconfined environment of the site.

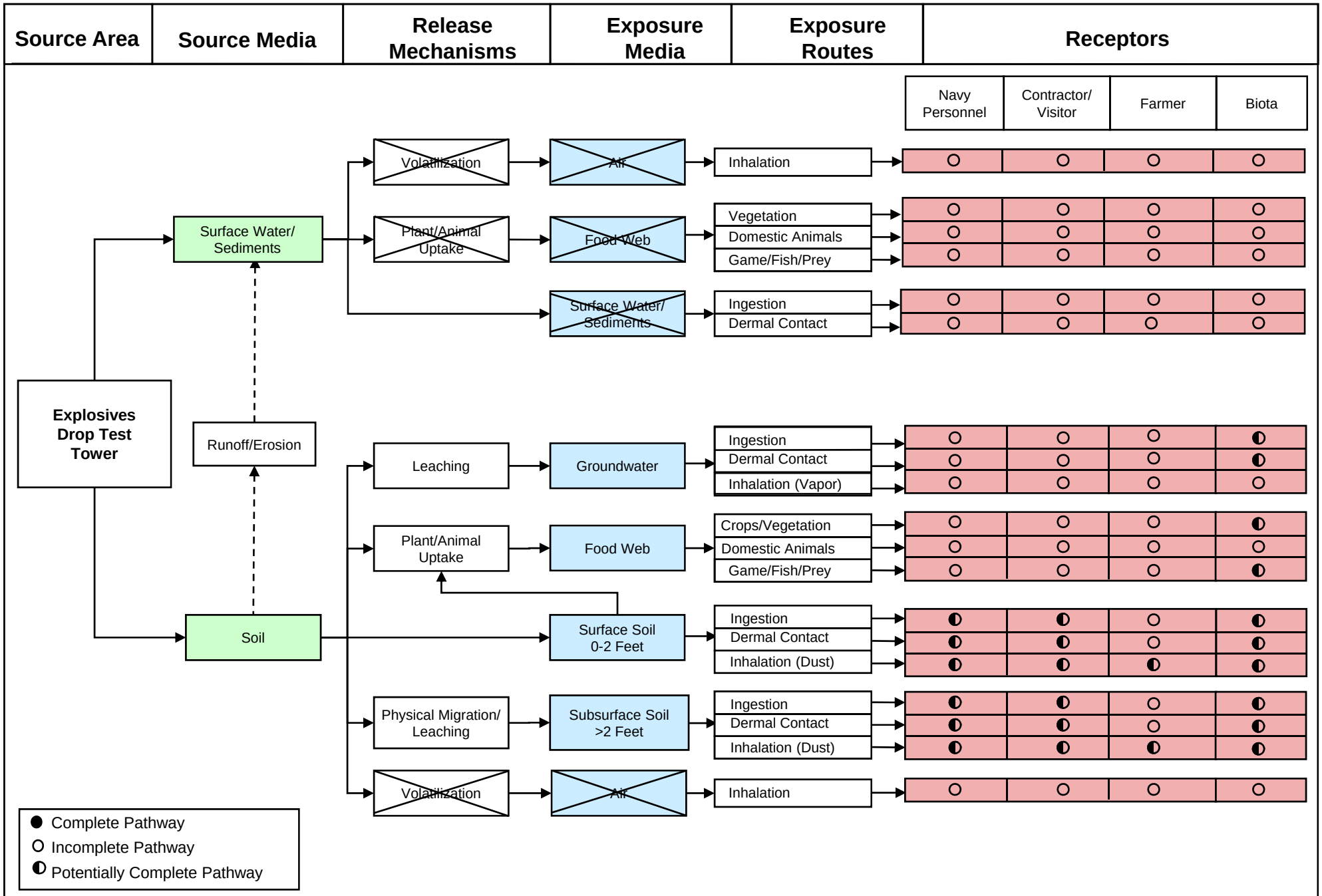

MALCOLM PIRNIE

Prepared for:

PRELIMINARY SITE INSPECTION – DRAFT FINAL PSI REPORT
EXPLOSIVES DROP TEST TOWER – MC EXPOSURE PATHWAY ANALYSIS
NAVWPNSTA SEAL BEACH, CALIFORNIA

MALCOLM PIRNIE, INC.

Figure 5.5-4
December 2008

5.5.12. Summary

The Explosives Drop Test Tower is located at the southern terminus of 7th Street within the Seal Beach NWR. The Explosives Drop Test Tower was used from 1955 to 1977, in conjunction with former Buildings 435 and 437 (both located 80 feet to the east), to test 1.4 cartridges. The tower currently is standing and is 50 feet high. Ordnance was dropped from the center of the tower into a 2.5-foot-square by 6-foot-high thick metal box. The bottom of the steel box was reinforced with a below-ground 4-inch-thick armor plate block on top of a 3-foot-thick concrete block. The reported use of the tower was to drop test 1.4 (minor explosion hazard) cartridges for safety testing (Mr. Ball, pers. comm.). The Explosives Drop Test Tower is not suspected to contain MEC. Explosive items would have been used under controlled testing situations and would have been accounted for during use. In addition, no indications of MEC related items were observed during the site visit. Soil sampling at IRP Site 24 were nondetect for explosives; however, soil sampling for metals and explosives has not occurred at the Explosives Drop Test Tower. Based on site history, potentially complete MC exposure pathways are present.

Draft Final Preliminary Site Inspection
NAVWPNSTA Seal Beach, California

MALCOLM PIRNIE

Map 5.5-1
Visual Survey
Explosives Drop Test Tower

Legend

- Installation Boundary
- MRP Sites
- Site Reconnaissance

0 25 50 100 Meters

Data Source: NAVWPNSTA Seal Beach Aerial, GIS Data, 2007

Coordinate System: UTM, Zone 11N
Datum: NAD 83
Units: meters

Contract: N62472-02-D-1300
Edition: Draft Final Preliminary Site Inspection
Date: December 2008

This page intentionally is blank.

Draft Final Preliminary Site Inspection
NAVWPNSTA Seal Beach, California

MALCOLM PIRNIE

Map 5.5-2
Range/Site Details
Explosives Drop Test Tower

Legend

- Installation Boundary
- MRP Sites
- Contours (2-ft interval)

0 25 50 100 Meters

Data Source: NAVWPNSTA Seal Beach Aerial, GIS Data, 2007

Coordinate System: UTM, Zone 11N
Datum: NAD 83
Units: meters

Contract: N62472-02-D-1300
Edition: Draft Final Preliminary Site Inspection
Date: December 2008

NAVWPNSTA Seal Beach, California

This page intentionally is blank.

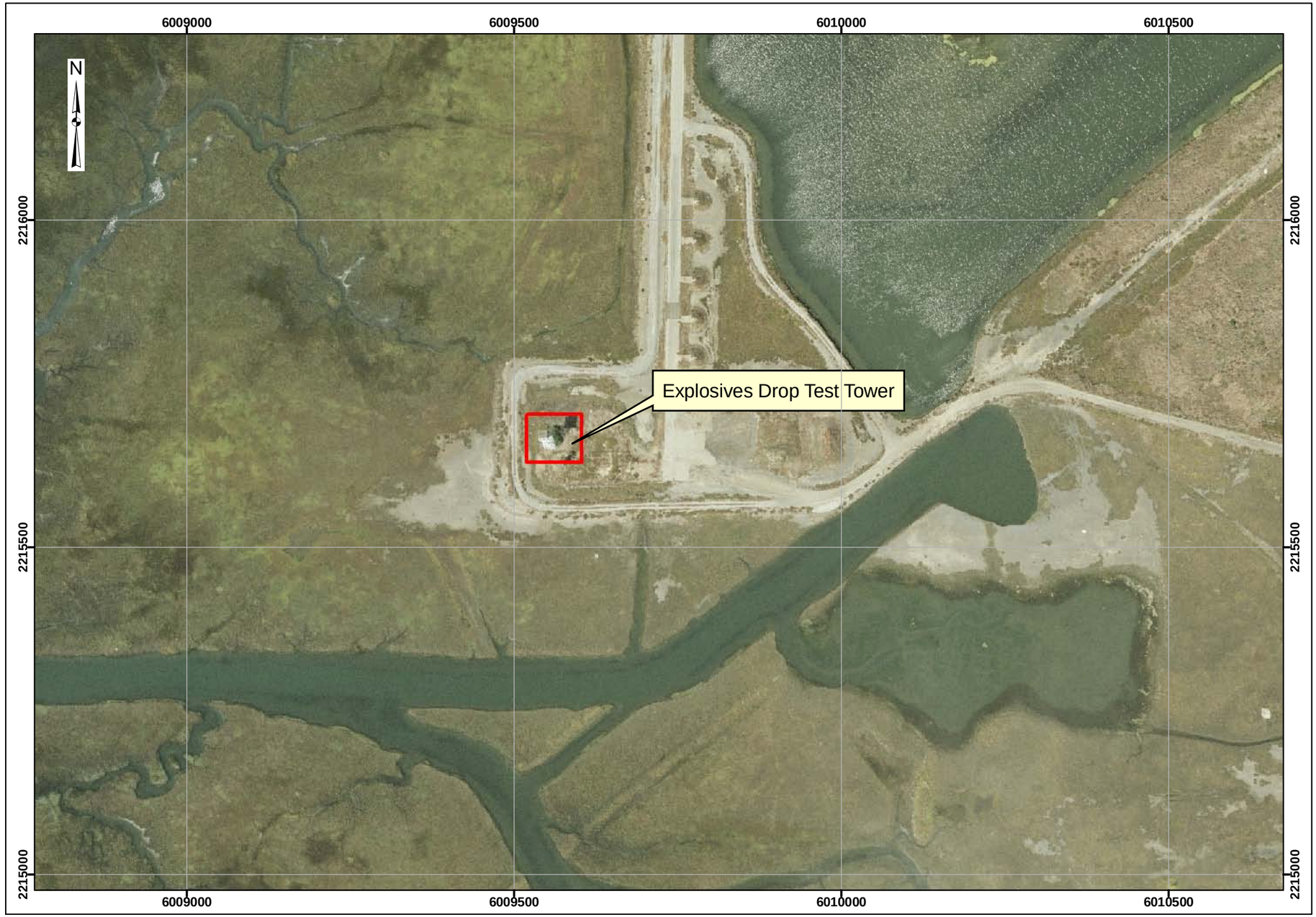

Draft Final Preliminary Site Inspection
NAVWPNSTA Seal Beach, California

MALCOLM PIRNIE

Map 5.5-3
Munitions Characterization
Explosives Drop Test Tower

Legend

Installation Boundary

MRP Sites

MEC Presence*

Known

Suspect

*There is no evidence of MEC Presence as determined through historical documentation, interviews, and visual survey.

0 25 50 100 Meters

Data Source: NAVWPNSTA Seal Beach Aerial, GIS Data, 2007

Coordinate System: UTM, Zone 11N
Datum: NAD 83
Units: meters

Contract: N62472-02-D-1300
Edition: Draft Final Preliminary Site Inspection
Date: December 2008

This page intentionally is blank.

5.6. Westminster POLB Fill Area

5.6.1. History and Site Description

The Westminster POLB Fill Area is located between Westminster Avenue and Westminster Street. The site is 1.75 miles long by an estimated 715 feet wide (approximately 180 acres) and was used to place 3 to 4 feet of fill (estimated to be 850,000 cubic yards) from the four POLB mitigation ponds located at 7th street (Section 5.2), Case Road, Perimeter Road, and Forrestal Road. The four ponds were created on NAVWPNSTA Seal Beach to mitigate the loss of wetlands during the construction of Pier J at the POLB. Construction started on the 7th Street Pond in October 1989 (POLB, 1989a).

A calculated 330,000 cubic yards of soil from the 7th Street POLB Mitigation Pond, excavated to an average depth of 5 feet bgs (based on a required mean average depth of 3 feet below the mean lower low water tide), potentially were placed in the Westminster POLB Fill Area (Figure 5.6-1 and Figure 5.2-2). As noted in Section 5.2, the POLB Mitigation Pond is a known MEC area.

Soil was also stockpiled at the currently operational NAVWPNSTA Seal Beach Wharf to 15 to 20 feet (POLB Civil Engineering Division Engineering Diagrams, 1988). Because the wharf area is operational, it is not evaluated under the MMRP. However, during the November 2007 site visit, it was observed that the soil stockpiled at the wharf was observed to be near ground level. It was reported and that the soil had been used for numerous unspecified fill projects with no known reports of MEC (Ms. Tamashiro, pers. comm.).

Suspected munitions present at the POLB Mitigation Pond that potentially could have been transported to the Westminster POLB Fill Area include live, inert and/or damaged rockets (e.g., 2.75- and 7.2-inch), projectiles (e.g., 20- to 40-mm), grenades, obscurants (i.e., fog oil), black and smokeless powders, primers, fuzes, small arms ammunition, CADs, PADs, and submunitions (NEESA, 1985). The concern of potential munitions at the POLB Mitigation Pond was documented in a 1989 POLB memo prior to excavation of the pond (POLB, 1989b). During the excavation of the 7th Street POLB Mitigation Pond, it was reported that 3-inch rounds were seen falling out of trucks and that EOD responded to these incidents (Mr. Giorgice, Mr. Carlock, and Mr. Durham, pers. comm.). While it is likely that soil from the 7th Street POLB Mitigation Pond was used as fill at the Westminster POLB Fill Area, there is no known documentation noting this.

5.6.1.1. Topography

The site has flat terrain and was filled to an elevation of 8.5 feet asl at the western edge of the site to 16.5 feet asl at its eastern edge. For additional information on the topography of NAVWPNSTA Seal Beach, see Section 3.2.

5.6.1.2. Geology

Westminster POLB Fill Area surficial geology is characterized by alluvial and coastal deposits (Qal) (NAVFACSW, 1998a). Section 3.3 includes a more detailed description of the geology of NAVWPNSTA Seal Beach.

5.6.1.3. Soil and Vegetation Types

The top few feet of soil at the site have soil fill excavated from the creation of the POLB Mitigation Ponds. Typical of NAVWPNSTA Seal Beach, soils at the site are expected to be of predominantly poorly drained clay and silt. Runoff is slow over bare level soil, and the erosion hazard is slight (NEESA, 1985; NAVFACSW, 2002). Section 3.4 includes a general description of the soil types at NAVWPNSTA Seal Beach.

The dominant vegetation on site is sparse coverage of low grasses and pickleweed (*Salicornia spp.*). Section 3.4 includes a general description of the vegetation types at NAVWPNSTA Seal Beach.

5.6.1.4. Hydrology

Surface water on the site generally flows southwest following the topography of the installation (NAVFACSW, 2002). Runoff is expected to be slow over bare level soil, and surface water is expected to only intermittently pond and to infiltrate to groundwater. There are no permanent water bodies on site. Section 3.5 includes a general description of the hydrology of NAVWPNSTA Seal Beach.

5.6.1.5. Hydrogeology

Groundwater in the vicinity of the site is approximately 20 feet bgs and is reported to flow to the northeast (NAVFACSW, 1999). Shallow groundwater is not used for drinking water or agricultural purposes in the vicinity. Production wells on the installation are greater than 600 feet bgs, and the closest reported well to the site, near the Contractors Gate to the west, is screened at a depth of roughly 600 feet bgs (NAVFACSW, 1998a). Lateral groundwater movement in the

moderately permeable shallow aquifer at NAVWPNSTA Seal Beach is estimated to be several hundred feet per year (NEESA, 1985). Section 3.6 includes a general description of the hydrogeology of NAVWPNSTA Seal Beach.

5.6.1.6. Cultural and Natural Resources

There are no known significant cultural resources within or adjacent to the site (NAVFACSW, 2002; COUP Incorporated, n.d.). No significant natural resources are noted specifically for the site. The site is open land used by geese as foraging area (NAVWPNSTA Seal Beach, 2007). Section 3.7 includes a general description of the cultural and natural resources of NAVWPNSTA Seal Beach.

5.6.1.7. Endangered and Special Status Species

Federally and state listed endangered or threatened species are documented at NAVWPNSTA Seal Beach, although they are primarily associated with the Seal Beach NWR (NAVWPNSTA Seal Beach, 2007; CDFG, 2007). Additional information on sensitive species data for NAVWPNSTA Seal Beach is presented in Section 3.8.

5.6.2. Visual Survey Observations and Results

A visual survey of the POLB fill area south of Westminster Avenue was conducted on 15 November 2007. During the visual survey, the following Malcolm Pirnie team members were present: Ms. Caruso (Team Leader), Mr. Schulman, Mr. Storrs (UXOSS), Ms. Gerritzen, and Mr. Asakawa. The following Navy representatives were present during the visual survey: Ms. Tamashiro and Mr. Gordon. The field team conducted the visual survey by walking a meandering path roughly 6,500 feet to the west and 3,000 feet to the east of Westminster Street. In total, approximately 2,500 feet of the western portion of the Westminster POLB Fill Area were walked, representing 35 acres of the 180-acre site. Approximately 20% of the site was visual surveyed. The area was not in use and had bare earth and low vegetation cover (Figure 5.6-1 and Figure 5.6-2). No signs of MEC or metal debris were observed.

A visual depiction of the site reconnaissance is provided on Map 5.6-1 located at the end of Section 5.6.12. Additional site details are illustrated on Map 5.6-2, also located at the end of Section 5.6.12.

Figure 5.6-1: Looking east from Westminster Street.
(Photograph was taken during the November 2007 on-site visual survey.)

Figure 5.6-2: Looking west from Westminster Street
(Photograph was taken during the November 2007 on-site visual survey.)

5.6.3. Munitions and Munitions Related Materials Associated with the Site

This section describes the munitions or munitions related materials known or suspected to be at the site, including the types and estimated maximum penetration depths. This includes both MEC and nonhazardous munitions related scrap.

The various types of munitions reported for the Primer/Salvage Yard and the POLB Mitigation Pond (Section 5.1 and Section 5.2) could be present at the Westminster POLB Fill Area. This includes live, inert and/or damaged rockets (e.g., 2.75- and 7.2-inch), projectiles (e.g., 20- to 40-mm), grenades, obscurants (i.e., fog oil), black and smokeless powders, primers, fuzes, small arms ammunition, CADs, PADs, and submunitions (NEESA, 1985). During site visit interviews, it was reported that 3-inch rounds were seen falling off of trucks during the excavation of soil from the POLB Mitigation Pond (Mr. Carlock, Mr. Giorgice, and Mr. Durham, pers. comm.).

The Westminster POLB Fill Area is not suspected to contain CWM filled munitions, electrically fuzed munitions, or DU associated munitions.

5.6.4. MEC Presence

The entire site has been subdivided and categorized into one of three levels of MEC presence, including: known MEC areas, suspected MEC areas, and areas not suspected to contain MEC. Known MEC areas are those areas where MEC were found in the past, a removal of MEC was conducted, EOD responses occurred at the site, or MEC were found during the site visit. Suspected MEC areas are those areas where no MEC have been found at the site; however, training or disposal may have occurred at the site, historical documents indicate MEC may be present, or there is the potential for MEC to be found at the site. Areas not suspected to contain MEC are those where full removals have occurred or no records have been found of munitions being used at the site. Map 5.6-3 illustrates the munitions characterization of the Westminster POLB Fill Area and is provided at the end of Section 5.6.12.

5.6.4.1. Known MEC Areas

There are no known MEC areas associated with the site.

5.6.4.2. Suspected MEC Areas

Soil excavated from the POLB Mitigation Pond, a known MEC site, was used as fill at the Westminster POLB Fill Area. The Westminster POLB Fill Area is a suspected MEC area based

on its site history and interview reports that 3-inch rounds were seen falling off of trucks during the excavation of soil from the POLB Mitigation Pond (Mr. Carlock, Mr. Giorgice, and Mr. Durham, pers. comm.).

5.6.4.3. Areas Not Suspected to Contain MEC

The Westminster POLB Fill Area is a suspected MEC area.

5.6.5. Ordnance Penetration Estimates

MEC depth, if present, would be equal to the dredged fill placed at the site, which is approximately 3 to 4 feet deep.

5.6.6. MC

MC associated with the POLB Mitigation Pond that may have been transported to the Westminster POLB Fill Area include nickel, zinc, ammonia, and TKN. Black powder (potassium nitrate) and C4 explosives (primarily RDX) reportedly were also used during EOD and safety demonstrations at the POLB Mitigation Pond. Explosive MC related to cartridges likely include double base powders (nitrocellulose, nitroglycerin). MC related to the removal of primers from projectiles at the adjacent Primer/Salvage Yard (Section 5.1) also include black powder and smokeless powder (nitrocellulose, nitroglycerin, and nitroguanidine). Metal MC related to black and smokeless powder include antimony, arsenic, copper, nickel, and zinc. In addition, the obscurant fog oil (kerosene / mineral oil) reportedly was spilled in the vicinity, which may include part of the POLB Mitigation Pond.

5.6.7. Contaminant Migration Routes

The natural migration (e.g., soil erosion) of MEC is not suspected given the low erosion capability of soils at the site. Earth moving associated with future construction, excavation, and maintenance at the site are mechanisms by which both MEC and MC in soil can be physically redistributed at the surface and to the subsurface. Surface migration of MC may occur naturally through surface soil erosion and by wind and/or mechanically driven dust generation. MC potentially present in surface soil can also be bioaccumulated by biota. MC can potentially leach through soil to groundwater in the shallow alluvial aquifer. A detailed CSM of migration and exposure pathways is presented in Section 5.6.11.

5.6.8. Receptors

Human receptors include Navy personnel, contractors (including maintenance and environmental), Navy-escorted visitors, and farmers. Ecological receptors (biota) are also potential receptors.

5.6.8.1. Nearby Populations

Population data for NAVWPNSTA Seal Beach and its vicinity are provided in Section 5.1.8.1.

5.6.8.2. Buildings Near/Within Site

A railroad spur runs the length of the site. In addition, the central portion of the site has an administrative building and vehicle and railroad scales.

5.6.8.3. Utilities On/Near Site

There are multiple phone lines, external lighting poles, and fires hydrants located on the Westminster POLB Fill Area site. U.S. government phone lines run along the site's entire western boundary, the middle portion of the northern boundary, and the western and eastern portions of the southern boundary. There are also phone lines running north-south at two areas in the eastern portion of the site. Four external lighting poles and four fire hydrants are located along the middle of the northern boundary. One fire hydrant is located at the middle of the southern boundary.

5.6.9. Land Use

The area is mostly unused, except for limited railcar movement along rail lines through the site. The central portion of the site has an administrative building and vehicle and railroad scales. No additional land uses are anticipated for the future.

5.6.10. Access Controls/Restrictions

The Westminster POLB Fill Area is located on NAVWPNSTA Seal Beach, which is a fenced and guarded installation. Security Forces personnel are responsible for maintaining law and order and for implementing access control policies and procedures. Access to the Westminster POLB Fill Area from within NAVWPNSTA Seal Beach controlled by vehicular security patrol; the site is unfenced.

5.6.11. CSM

This CSM was developed following guidance documents issued by the USEPA for hazardous waste sites and the USACE for ordnance and explosives sites. Guidance documents include the USEPA's *Guidance for Conducting Remedial Investigations and Feasibility Studies under CERCLA* (EPA/540/G-89/004) and the *Final USACE CSM Guidance Development of Integrated Conceptual Site Models for Environmental Ordnance and Explosives Sites* (USACE, 2003).

The CSM describes the site and its environmental setting. The CSM presents information regarding: 1) MEC and/or MC known or suspected to be at the site; 2) current and future reasonably anticipated or proposed uses of the real property; and 3) actual, potentially complete, or incomplete exposure pathways linking them. The CSM is the basis for the prioritization and remediation cost estimate.

The CSM is presented in a series of information profiles that provide information about the site. The information profiles are included in Table 5.6-1.

Table 5.6-1: CSM Information Profiles – Westminster POLB Fill Area

Profile Type	Information Needs	PSI Findings
Range/Site Profile	Installation Name	NAVWPNSTA Seal Beach
	Installation Location	NAVWPNSTA Seal Beach is located in the city of Seal Beach in Orange County, California, approximately 26 miles south of the Los Angeles urban center and 8 miles east of Long Beach.
	Range/Site Name	Westminster POLB Fill Area
	Range/Site Location	The Westminster POLB Fill Area is located south of Westminster Avenue and north of Westminster Street at the top of the south-central portion of the installation.
	Range/Site History	Railroad operations have been conducted in the area since the 1940s. In 1989/1990, fill (in part, from 7th Street POLB Mitigation Pond, a known MEC site) was placed in the Westminster POLB Fill Area.
	Range/Site Area and Layout	The Westminster POLB Fill Area occupies approximately 180 acres.
	Range/Site Structures	A railroad spur runs the length of the site. In addition, the central portion of the site has an administrative building and vehicle and railroad scales.
	Range/Site	Map 2.1-1 shows the location of the site.

Table 5.6-1: CSM Information Profiles – Westminster POLB Fill Area		
Profile Type	**Information Needs**	**PSI Findings**
	Boundaries	N: Westminster Avenue, which bisects the northern and southern areas of NAVWPNSTA Seal Beach, is 75 to 250 feet to the north. The installation boundary is roughly 1 mile north of the site, where the installation is bordered by the city of Seal Beach. S: Westminster Street and agricultural fields are to the south. The installation boundary is located approximately 1.75 miles to the south. Beyond the installation boundary is the Orange County Flood Control Channel, which flows into Anaheim Bay and then the Pacific Ocean, and the city of the Huntington Beach. W: Active installation offices and production buildings are to the west. The installation boundary is one-quarter mile away, where the installation is bordered by the city of Seal Beach. E: The station's fenced boundary is adjacent to the east, where the installation is bordered by the city of Westminster.
	Range/Site Security	The Westminster POLB Fill Area is located on NAVWPNSTA Seal Beach, which is a fenced and guarded installation. Security Forces personnel are responsible for maintaining law and order and for implementing access control policies and procedures. Access to the Westminster POLB Fill Area from within NAVWPNSTA Seal Beach is controlled by vehicular security patrol; the site is unfenced.
Munitions/ Release Profile	Munitions Types	The various types of munitions reported for the Primer/Salvage Yard and the POLB Mitigation Pond could be present at the Westminster POLB Fill Area. This includes live, inert, and/or damaged rockets (e.g., 2.75- and 7.2-inch), projectiles (e.g., 20- to 40-mm), grenades, obscurants (i.e., fog oil), black and smokeless powders, primers, fuzes, small arms ammunition, CADs, PADs, and submunitions (NEESA, 1985). During site visit interviews, it was reported that 3-inch rounds were seen falling off of trucks during the excavation of soil from the POLB Mitigation Pond (Mr. Carlock, Mr. Giorgice, and Mr. Durham, pers. comm.).
	Maximum Probability Penetration Depth	MEC depth, if present, would be equal to the fill placed at the site, which is approximately 3 to 4 feet deep.
	MEC Density	MEC density is suspected to be very low.

Table 5.6-1: CSM Information Profiles – Westminster POLB Fill Area		
Profile Type	**Information Needs**	**PSI Findings**
	MEC Scrap/Fragments	No MEC related material or metallic debris was observed during the site visit or reported in any documents obtained for this PSI.
	Associated MC	MC associated with the POLB Mitigation Pond that may have been transported to the Westminster POLB Fill Area include nickel, zinc, ammonia, and TKN. Black powder (potassium nitrate) and C4 explosives (RDX) reportedly were also used during EOD and safety demonstrations. Explosive MC related to cartridges likely include double base powders (nitrocellulose, nitroglycerin). MC related to the removal of primers from projectiles at the adjacent Primer/Salvage Yard also include black powder and smokeless powder (nitrocellulose, nitroglycerin, and nitroguanidine). Metal MC related to black and smokeless powder include antimony, arsenic, copper, nickel, and zinc. In addition, the obscurant fog oil (kerosene/mineral oil) reportedly was spilled in the vicinity of the Primer/Salvage Yard, which may include part of the POLB Mitigation Pond.
	Migration Routes / Release Mechanisms	The natural migration (e.g., soil erosion) of MEC is not suspected given the low erosion capability of soils at the site. Earth moving associated with future construction, excavation, and maintenance at the site are mechanisms by which both MEC and MC in soil can be physically redistributed at the surface and to the subsurface. Surface migration of MC may occur naturally through surface soil erosion and by wind and/or mechanically driven dust generation. MC potentially present in surface soil can also be bioaccumulated by biota. MC can potentially leach through soil to groundwater in the shallow alluvial aquifer.
Physical Profile	Climate	The climate at NAVWPNSTA Seal Beach is typical of the maritime subclimate within the prevailing California Mediterranean climate: mild winters, cool summers, high relative humidity, and frequent early morning clouds that lead to afternoon sunshine. The annual average temperature is 74°F. Summer average high temperatures range from 77°F to 84°F, and average lows range from 60°F to 65°F. Winters tend to be moderate, with highs typically 67°F and average lows ranging from 45°F to 47°F. Yearly precipitation averages 13 inches per year; February is the wettest month, averaging 3 inches per year, and July is the driest, averaging 0.02 inches per year (WRCC, n.d.). Periodically, the region will experience *El Niño* conditions, which tend to bring wetter winters to the area through

Table 5.6-1: CSM Information Profiles – Westminster POLB Fill Area		
Profile Type	**Information Needs**	**PSI Findings**
		heavy storms. The prevailing winds are westerly with an average velocity of 10 knots; occasional strong dry northeasterly winds descend the mountain slopes in the fall, winter, and early spring months (NAVFACSW, 1979). The strongest winds that occur for the region are associated with the winter and spring storms off the Pacific Ocean (NAVFACSW, 2005).
	Topography	The Westminster POLB Fill Area has flat terrain and was filled to an elevation of 8.5 feet asl at the western edge of the site to 16.5 feet asl at its eastern edge (POLB Diagram, 1986).
	Geology	Alluvial and coastal deposits (Qal) characterize the Westminster POLB Fill Area surficial geology (NAVFACSW, 1998a).
	Soil	The top few feet of soil at the site have soil fill excavated from the creation of the POLB Mitigation Ponds. Typical of NAVWPNSTA Seal Beach, native soils at the site are expected to be of predominantly poorly drained clay and silt (NEESA, 1985; NAVFACSW, 2002).
	Hydrogeology	Groundwater in the vicinity of the site is approximately 20 feet bgs and is reported to flow to the northeast (NAVFACSW, 1999). Shallow groundwater is not used for drinking water or agricultural irrigation in the vicinity of the site. Production wells on the installation are greater than 600 feet bgs, and the closest reported well to the site, near the Contractors Gate, is screened at a depth of roughly 600 feet bgs (NAVFACSW, 1998a). Lateral groundwater movement in the moderately permeable shallow aquifer at NAVWPNSTA Seal Beach is estimated to be several hundred feet per year (NEESA, 1985).
	Hydrology	Surface water generally flows southwest following the topography of the installation (NAVFACSW, 2002). Runoff is expected to be slow over bare level soil, and surface water is expected to only intermittently pond and to infiltrate to groundwater. There are no permanent water bodies on site.
	Vegetation	The dominant vegetation on site is sparse coverage of low grasses and pickleweed (*Salicornia spp.*).
Land Use and Exposure	Current Land Use	The area is unused, other than for limited railcar movement through the site and a small portion in the center of the site that is used for railroad transfer operations.

Table 5.6-1: CSM Information Profiles – Westminster POLB Fill Area		
Profile Type	**Information Needs**	**PSI Findings**
Profile	Current Human Receptors	Current human receptors include Navy personnel, contractors (including maintenance personnel), and Navy-escorted visitors. Leaseholder farmers and farm workers inhaling dust potentially impacted with MC are also potential receptors.
	Current Activities (frequency, nature of activity)	The area is unused other than for railcar use through the site, maintenance of the rail spurs, and mowing to keep grasses low.
	Potential Future Land Use	Future land uses are expected to be the same as current use.
	Potential Future Human Receptors	Future receptors are expected to be the same as current receptors.
	Potential Future Land Use Related Activities	Future land use activities are expected to be the same as current uses.
	Zoning / Land Use Restrictions	The unfenced site is part of a secure and active Navy base. There are no other known land use restrictions.
	Demographics/ Zoning	NAVWPNSTA Seal Beach has a combined workforce of 150 military personnel and 600 civilian personnel. Population data include the following (U.S. Census, 2000):: • City of Seal Beach: 24,154 • City of Westminster: 88,207 • City of Huntington Beach: 189,594 • Orange County: 2,846,289
	Beneficial Resources	Except for railway operations, the area is open unused land that can be used by wildlife and is noted in the INRMP as a goose foraging area (NAVWPNSTA Seal Beach, 2007).
Ecological Profile	Habitat Type	The habitat is open land, and is classified as dredge spoil pickleweed (*Salicornia spp*.) (NAVWPNSTA Seal Beach, 2007).
	Degree of Disturbance	The site is composed of fill material. There are no activities associated with the site that would create disturbance other than occasional mowing to keep the grasses low and railcars passing through the site.
	Ecological Receptors and Species of Special Concern	Reported mammals at the installation include various species of pocket gophers, voles, shrews, and ground squirrels, Audubon's cottontail rabbit (*Sylvilagus audubonii*) and brush rabbit (*Sylvilagus bachmani*). The avian wildlife at the installation forages over a large area

Table 5.6-1: CSM Information Profiles – Westminster POLB Fill Area		
Profile Type	**Information Needs**	**PSI Findings**
		and potentially may inhabit the Westminster POLB Fill Area site for short periods of time (NAVFACSW, 2005; NAVWPNSTA Seal Beach, 2007). Nineteen species of raptors are known to occur on NAVWPNSTA Seal Beach, nine of which are known to nest on the installation: red-tailed hawk (*Buteo jamaicensis*), Swainson's hawk (*Buteo swainsoni*), great-horned owl (*Bubo virginianus*), burrowing owl (*Athene cunicularia*), loggerhead shrike (*Lanius ludovicianus*), American kestrel (*Falco sparverius*), great blue heron (*Ardea herodias*), common raven (*Corvus corax*), and American crow (*Corvus brachyrhynchos*). Resident birds listed by federal or state agencies, or both, as threatened or endangered include the following shorebird and salt marsh species: • Belding's savannah sparrow (*Passerculus sandwichensis beldingi*) • California brown pelican (*Pelecanus occidentalis californicus*) • California least tern (*Sterna antillarum browni*) Light-footed clapper rail (*Rallus longirostris levipes*) Western snowy plover (*Charadrius alexandrinus nivosus*)
	Relationship of MEC/MC Sources to Habitat and Potential Receptors	Ecological receptors may come into direct contact with MEC or MC in soil. Ecological receptors coming into contact with MEC and thereby creating an explosive hazard is unlikely, but should be considered where threatened and/or endangered species may be present. Receptors may be exposed to MC that has been incorporated into the food chain (e.g., bioaccumulated in plants and animals). Various mammals and other animals that inhabit the area may come into contact with MC while burrowing, foraging, or nesting. They may also consume plants and/or prey that have bioaccumulated MC.

A key element of the CSM is the exposure pathway analysis, which brings together the information profiles about site conditions, MEC/MC status, and possible receptors into a complete picture. The exposure pathway analysis is critical for the CSM because it helps establish the hypothesis of the site and determines the potential course that MEC and/or MC take from a source to a receptor. Recommendations for the site are then based on the exposure pathway analysis, ranging from no further action to an SI.

For MEC, a complete or potentially complete exposure pathway must include the following components: 1) a source (e.g., locations where MEC are expected to be found); 2) access (e.g., controlled or uncontrolled access, items on the surface or within the subsurface); 3) an activity (e.g., nonintrusive grounds maintenance, intrusive construction); and 4) receptors (e.g., Navy personnel, construction workers, authorized visitors). It is important to recognize that environmental mechanisms (e.g., erosion) and/or human intervention may result in the repositioning of MEC.

For MC, a complete or potentially complete exposure pathway must include the following components: 1) a source (e.g., locations where MC are expected to be found); 2) an exposure medium (e.g., surface soil); 3) an exposure route (e.g., dermal contact); and 4) receptors (e.g., Navy personnel, construction workers, recreational users, authorized visitors). If the point of exposure is not at the same location as the source, the pathway may also include a release mechanism (e.g., erosion) and a transport medium (e.g., surface water).

The potential interactions between the source and receptors are assessed differently for MEC and MC. For MEC, interaction between the potential receptors and an MEC source has two components. The receptor must have access to the source and must engage in some activity that results in contact with individual MEC items within the source area. For MC, interaction between the source and receptors involves a release mechanism for the MC, an exposure medium that contains the MC, and an exposure route that places the receptor into contact with the contaminated medium.

A graphical illustration of the details of the CSM is included in Figure 5.6-3 and Figure 5.6-4.

MEC Interactions and Pathway Analysis

The exposure pathway analysis for MEC presents the exposure pathways based on MEC being potentially present at the Westminster POLB Fill Area (Section 5.6.4).

The presence of human and biota receptors results in a potentially complete surface MEC exposure pathways via handling or treading underfoot. Subsurface MEC exposure pathways are potentially complete for human and biota receptors at the site from intrusive activities (e.g., subsurface sampling and/or construction for human receptors and burrowing for biota receptors). Ecological receptors coming into contact with MEC and thereby creating an explosive hazard is unlikely, but should be considered where threatened and/or endangered species may be present.

MC Interactions and Pathway Analysis

For MC, there is a potential release mechanism for MC (e.g., physical migration, uptake into the food web), an exposure medium containing the MC (e.g., soil), and a potential exposure route (e.g., incidental ingestion, dermal contact, inhalation) that places the receptor into contact with the contaminated medium. Pathways for surface water / sediment and for soil are discussed below.

Surface Water / Sediment

There are no surface water bodies within the Westminster POLB Fill Area boundary. Consequently, all exposure pathways for humans and biota are evaluated as incomplete.

Soil

Release mechanisms for MC in soil with potentially complete pathways include plant and animal uptake, physical migration, and leaching to subsurface soil. Human receptors may come in contact with MC in surface and/or subsurface soil during activities for operations and maintenance (e.g., subsurface utility trenching, mowing, rail spur maintenance) and environmental activities (e.g., drilling and soil sampling, seeding). Exposure routes include incidental ingestion of and dermal contact with soil and inhalation of surface and subsurface dust generated by wind or during surface and subsurface earth moving activities. Biota receptors may come in contact with MC in surface and/or subsurface soil by plant uptake of MC or incidental soil ingestion while burrowing, foraging, or nest building. Similar to humans, inhalation of MC impacted dust is possible from wind or earth moving activities. MC in soil can potentially bioaccumulate in biota that uptake MC at the site.

Groundwater

The release mechanism of leaching to groundwater is possible; however, shallow groundwater is not used for drinking water or irrigation on NAVWPNSTA Seal Beach so direct pathways to humans are incomplete. MC can potentially leach from soil to groundwater in the shallow alluvial aquifer; because shallow groundwater is tidally influenced and flows into the salt water marshes at the installation, there is a potentially complete pathway between MC in shallow groundwater and biota in the marshes. The deep aquifers are too deep for direct exposure to humans, plants, or animals; NAVWPNSTA Seal Beach production wells are greater than 600 feet bgs.

Inhalation due to MC volatilization for all source media except for soil is evaluated to be incomplete based on the low volatility of the MC of concern (i.e., metals, explosives) and the open unconfined environment of the site.

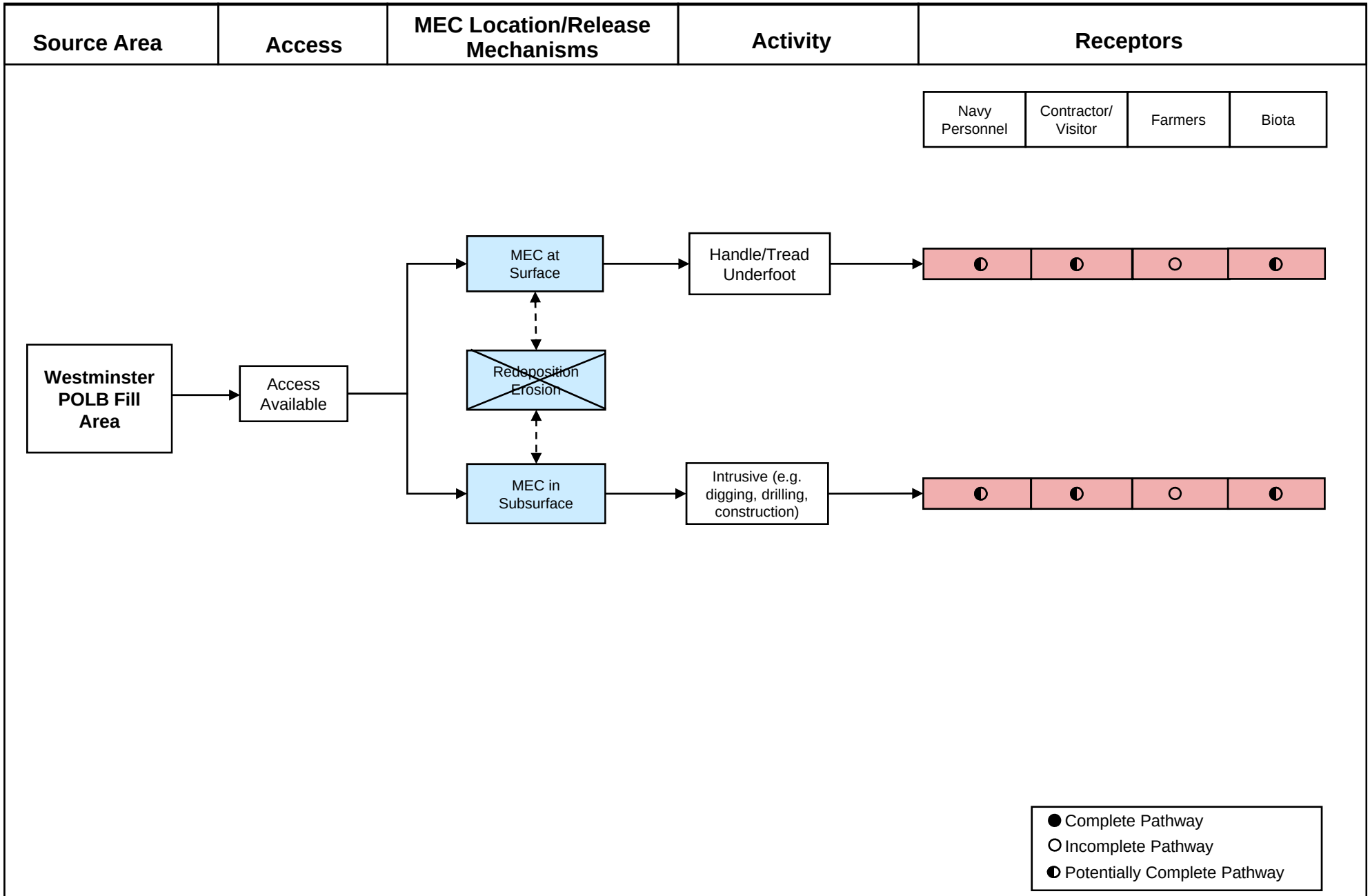

MALCOLM PIRNIE

Prepared for:

PRELIMINARY SITE INSPECTION – DRAFT FINAL PSI REPORT
WESTMINSTER POLB FILL AREA – MEC EXPOSURE PATHWAY ANALYSIS
NAVWPNSTN SEAL BEACH, CALIFORNIA

MALCOLM PIRNIE, INC.

Figure 5.6-3
December 2008

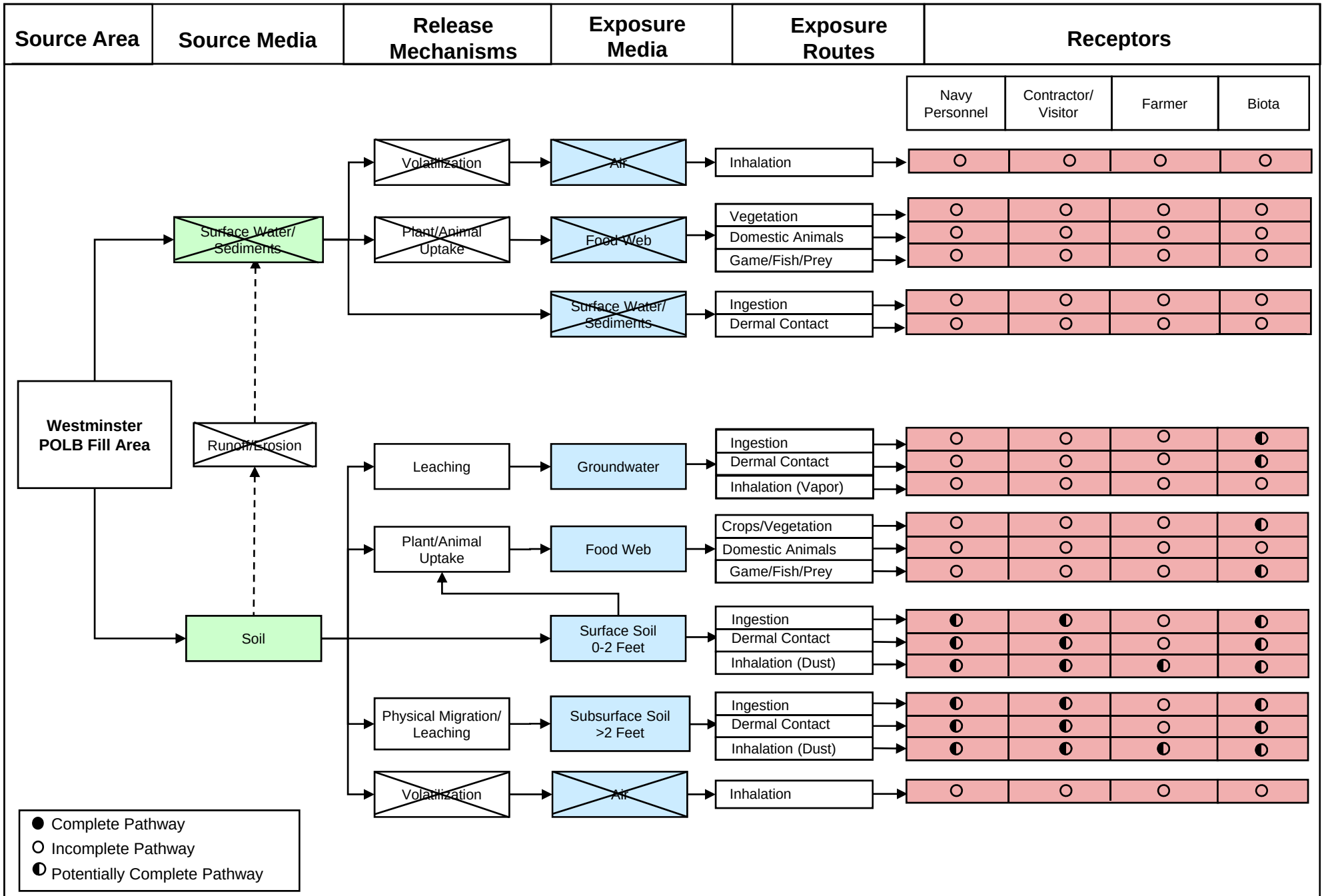

MALCOLM PIRNIE

Prepared for:

PRELIMINARY SITE INSPECTION – DRAFT FINAL PSI REPORT
WESTMINSTER POLB FILL AREA – MC EXPOSURE PATHWAY ANALYSIS
NAVWPNSTA SEAL BEACH, CALIFORNIA

MALCOLM PIRNIE, INC.

Figure 5.6-4
December 2008

5.6.12. Summary

The Westminster POLB Fill Area along the Westminster Railroad spur is located between Westminster Avenue and Westminster Street. The site is 1.75 miles long by an estimated 715 feet wide (approximately 180 acres). In 1989/1990, the Westminster POLB Fill Area was used to place 3 to 4 feet of fill that was, in part, excavated from the POLB Mitigation Pond, a known MEC area. The Westminster POLB Fill Area is a suspected MEC area based on its site history and interview reports that 3-inch rounds were seen falling off of trucks during the excavation of soil from the POLB Mitigation Pond (Mr. Carlock, Mr. Giorgice, and Mr. Durham, pers. comm.).Durham). Based on site history, potentially complete MEC and MC exposure pathways are present.

Draft Final Preliminary Site Inspection
NAVWPNSTA Seal Beach, California

MALCOLM PIRNIE

Map 5.6-1
Visual Survey
Westminster POLB Fill Area

Legend

- Site Reconnaissance
- MRP Sites
- Installation Boundary

0 125 250 500 Meters

Data Source: NAVWPNSTA Seal Beach Aerial, GIS Data, 2007

Coordinate System: UTM, Zone 11N
Datum: NAD 83
Units: meters

Contract: N62472-02-D-1300
Edition: Draft Final Preliminary Site Inspection
Date: December 2008

This page intentionally is blank.

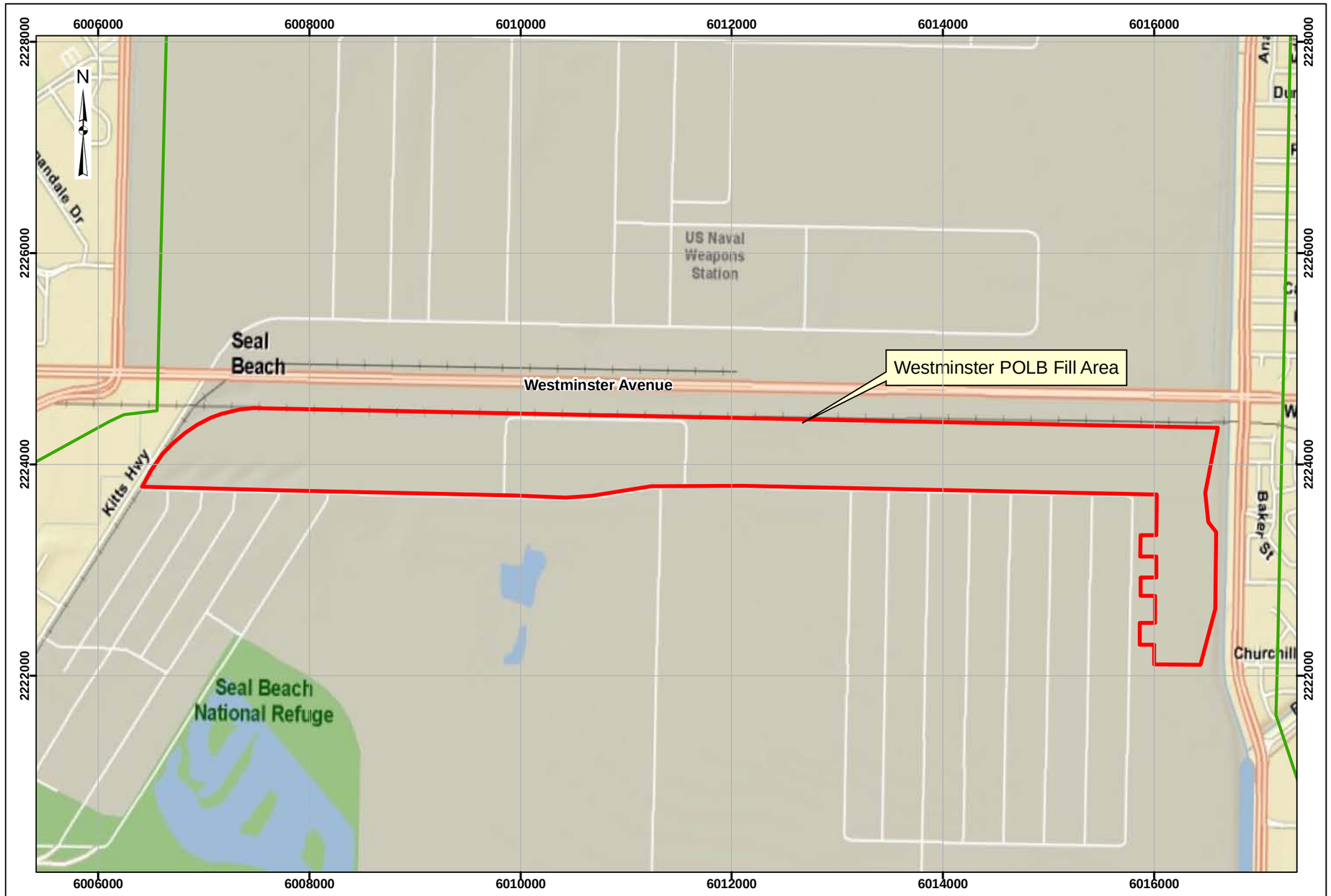

Draft Final Preliminary Site Inspection
NAVWPNSTA Seal Beach, California

Map 5.6-2
Range/Site Details
Westminster POLB Fill Area

Legend

Installation Boundary

MRP Sites

0 125 250 500 Meters

Data Source: NAVWPNSTA Seal Beach Aerial, GIS Data, 2007

Coordinate System: UTM, Zone 11N
Datum: NAD 83
Units: meters

Contract: N62472-02-D-1300
Edition: Draft Final Preliminary Site Inspection
Date: December 2008

NAVWPNSTA Seal Beach, California

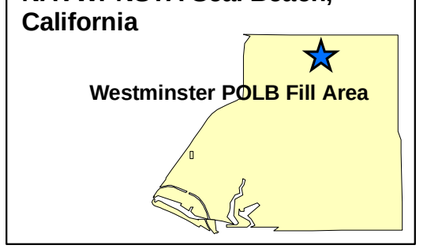

This page intentionally is blank.

Draft Final Preliminary Site Inspection
NAVWPNSTA Seal Beach, California

MALCOLM PIRNIE

Map 5.6-3
Munitions Characterization
Westminster POLB Fill Area

Legend

Installation Boundary

MRP Sites

MEC Presence*

Known

Suspect

*MEC Presence was determined through review of historical documentation, interviews, and visual survey.

0 125 250 500 Meters

Data Source: NAVWPNSTA Seal Beach Aerial, GIS Data, 2007

Coordinate System: UTM, Zone 11N
Datum: NAD 83
Units: meters

Contract: N62472-02-D-1300
Edition: Draft Final Preliminary Site Inspection
Date: December 2008

This page intentionally is blank.

Appendix A: References

This page intentionally is blank.

REFERENCES

Reports

Bakhtar Associates. 1999. *Detection and Discrimination of Buried Grenades and Small Arms at The Naval Weapons Station [IRP Site 16] Using U.S. Air Force EarthRadar Technology, Final Report*.

California Department of Fish and Game (CDFG). 2007. *State and Federally Listed Endangered And Threatened Animals of California, October 2007*. http://www.dfg.ca.gov/wildlife/general_animals.html. (Accessed December 2007).

California Environmental Protection Agency, State Water Resources Control Board (CALEPA, SWRCB). 2001. *Water Quality Control Plan Ocean Waters of California*.

COUP Incorporated. n.d. *Department of the Navy Reference Guide To Historic Properties*. https://138.145.4.91/denix/Public/ES-Programs/Conservation/Legacy/Ref-Guide/refguide.html. (Accessed December 2007).

Department of Defense (DoD). 2007. DoD Directive 6055.9E *Explosives Safety Management and the DoD Explosives Safety Board*.

Department of Toxic Substances Control (DTSC). 2003. *Initial Study for the Action Memorandum/Remedial Action Plan (AM/RAP) for a Non-Time Critical Removal Action at Installation Restoration (IR) Site 7, Station Landfill, Naval Weapons Station (NAVWPNSTA) Seal Beach, California*. http://www.dtsc.ca.gov/OMF/Projects/upload/Seal-Beach-Site7_CEQA_dNegDec.pdf. (Accessed October 2007).

Department of Water Resources. 2003. *California's Groundwater, Bulletin 118, Update 2003*. http://www.groundwater.water.ca.gov/bulletin118/update2003/index.cfm. (Accessed October 2007).

Earth Technology Corporation. 1989. *Subsurface Soil Investigation, Anaheim Bay Mitigation, Case Road, Perimeter Road And Seventh Avenue Site Seal Beach, California*.

EODC Sonnenberg and EODC Scroggins. 2007. *Explosives Ordnance Incident Report, NWS Seal Beach*.

Higgins, C.T., and R.H. Chapman. 1984. *Geothermal Energy at Long Beach Naval Shipyard and Naval station and At Seal Beach Naval Weapons Station, California*. Prepared for: California Department of Conservation Division of Mines and Geology. http://www.osti.gov/energycitations/product.biblio.jsp?osti_id=6412449. (Accessed October 2007).

Institute for Defense Analysis. 2001. *Evaluation of EarthRadar UXO Testing at Fort A.P. Hill*. http://stinet.dtic.mil/cgi-bin/GetTRDoc?AD=ADA398381&Location=U2&doc=GetTRDoc.pdf. (Accessed December 2007).

Naval Energy and Environmental Support Activity (NEESA). 1985. *Initial Assessment Study of Naval Weapons Station, Seal Beach, California*.

------. 1987. *Final Report Volume I, Plan of Action for Verification Study, Naval Weapons Station, Seal Beach, California - NEESA 21-003*.

------. 1990. *Addendum to the Preliminary Assessment (Initial Assessment Study), Naval Weapons Station Seal Beach, CA*.

Naval Facilities Engineering Command Southwest Division (NAVFACSW). 1990. *Final Report – Site Inspection, Naval Weapons Station, Volumes I and II, Seal Beach, California.* October.

------. 1998a. *Installation Restoration Program Final (Revision 1) Operable Unit-4 Site Inspection Report.* Prepared with CH2M Hill.

------. 1998b. *Site Inspection Report, Final, Weapons Support Facility, Seal Beach Seal Beach, California Installation Restoration Program, Operable Unit 5.* Prepared with CH2M Hill.

------. 1998c. *Focused Site Inspection Report, Final, Weapons Support Facility, Seal Beach Seal Beach, California Installation Restoration Program, Operable Units 4 and 5.* Prepared with CH2M Hill.

------. 1999. *Operable Units 4 and 5 Screening Ecological Risk Assessment*. Prepared in partnership with CH2M Hill.

------. 2002. *Final Report – Focused Site Inspection Phase II, Naval Weapons Station, Seal Beach, California.* Prepared by CH2M HILL

------. 2005. *Tier II Ecological Risk Assessment, Site 74, Naval Weapons Station, Seal Beach, Seal Beach, Orange County, California.* Prepared in partnership with CH2M HILL. http://www.cnic.navy.mil/sealbeach/Programs/Env/IRP/SB_Info/Documents_SB/index.htm, (Accessed October 2007).

------. 2007 (unpublished). *Draft Preliminary Assessment, Naval Weapons Station Seal Beach, California*.

Naval Facilities Engineering Command, Western Division, San Diego Branch. 1979. *Environmental Engineering Survey Report, Seal Beach, California.* July.

Naval Surface Warfare Center (NSWC). 2003. *Draft Explosive Hazard Characterization Evaluation of Selected Explosive Processing Facilities Located at the Naval Weapons Station in Seal Beach, California*.

Naval Weapons Station (NAVWPNSTA) Seal Beach. *Environmental Programs (Environmental Fact Sheet 1).* http://www.cnic.navy.mil/sealbeach/Programs/Env/IRP/SB_Info/Documents_SB/index.htm. (Accessed October 2007).

------. 2007. *Draft Installation Natural Resource Management Plan (INRMP), Naval Weapons Station Seal Beach.*

------. n.d. http://www.cnic.navy.mil/sealbeach/. (Accessed October 2007).

Office of the Deputy Under Secretary of Defense. 2001. *Management Guidance for the Defense Environmental Restoration Program* (DERP).

Port of Long Beach (POLB). 1989a. *October 3, 1989 Minutes: Anaheim bay Mitigation Project, Specification HD-S1670, Construction Conference No. 13*.

------. 1989b. *September 12, 1989 Minutes: Anaheim bay Mitigation Project, Specification HD-S1670, Construction Conference No. 10*.

U.S. Army Corps of Engineers. 2003. Engineer Manual (EM) 1110-1-1200 *Engineering and Design - Conceptual Site Models for Ordnance and Explosives (OE) and Hazardous, Toxic, and Radioactive Wastes (HTRW) Projects.*

U.S. Census. 2000. 90740 - Population Finder - American FactFinder. http://factfinder.census.gov/servlet/SAFFPopulation?_event=Search&_name=90740&_state=&_county=&_zip=90740&_sse=on. (Accessed March 2008).

U.S. Environmental Protection Agency (EPA). 1988. *Guidance for Conducting Remedial Investigations and Feasibility Studies Under CERCLA*. EPA/540/G-89/004. OSWER Directive 9355.3-01.

U.S. Fish and Wildlife Service (USFWS). 2007. *Seal Beach National Wildlife Refuge Planning Update 1, March 2007.* www.fws.gov/sandiegorefuges/new/ccp3/pdf/Planning%20Update%20SB1%20final.pdf. (Accessed December 2007).

Western Regional Climate Center (WRCC). n.d. National Climatic Data Center (NCDC) station Historical Listing for NWS Cooperative Network. http://www.wrcc.dri.edu/cgi-bin/cliMAIN.pl?ca5085. (Accessed October 2007).

Engineering Diagrams

Ammunition Overhaul Case Bldg, Location and Grading Plan, 1944

Ammunition Overhaul Case Filling Bldg 1st & 2nd Floor, 1944

U.S. Naval Ammunition and Net Depot Underground Utilities (As Built), Sheet 16 or 21, 1945

As Built Underground Utilities (Salvage Yard area), 4 of 21, 1945

Master Shore and Development Plan Part IV, Plate K, 1954

Static Rocket Firing Test Facility Bldg Floor Plan (QE-10) 437, 1954

Equipment Layout Plan, Bldg 102 SOP-11 Exterior Maintenance 5/38 Projectiles, 1954

Quality Evaluation Laboratory, Steel (QE-10b) 436 Drop Test Tower, 1956

Mineral Rights, U.S. Naval Ammunition and Net Depot, Seal Beach, CA 1957

Additions to Explosive D Stream Out Shed, Bldg 98, 1958

Vacuum Dust Removal and Cleaning System, Bldg 101, Location & Grading Plan, 1965

Master Plan Basic Information Maps, General Site Plan (showing wetland extent), Seal Beach Facility, 1969

General Development Map, Key Map, Existing Structures, 1969

Range Survey Form EOD Areas 1 & 2, 1973

Floor Plan Building 101, 1977

IAS Waste Disposal Sites, (marked up 1975 General Development Map), 1985

POLB Sheet Index 2 of 32, 1987

POLB Grading Plan - Forrestal Road & Bolsa Cell 10 of 32, 1987

POLB Grading Plan - Case Road North 11 of 32, 1987

POLB Grading Plan - Case Road South 12 of 32, 1987

POLB Grading Plan - Seventh Street North 13 of 32, 1987

POLB Grading Plan - Seventh Street South 14 of 32, 1987

POLB Grading Plan - Perimeter Road 15 of 32, 1987

POLB Fill Area Grading Plan 24 of 32, 1987

POLB Fill Area Grading Plan 25 of 32, 1987

POLB Fill Area Grading Plan 26 of 32, 1987

POLB Fill Area Grading Plan 27 of 32, 1987

POLB Fill Area Grading Plan 28 of 32, 1987

POLB Fill Area Grading Plan 29 of 32, 1987

POLB Fill Area Grading Plan 30 of 32, 1987

POLB Fill Area Grading Plan 31 of 32, 1987

POLB Fill Area Grading Plan 32 of 32, 1987

Floor Plan Bldg (AO-13) 102, Proposed Dust Collector Installation for Buffing Machines, Undated

Proposed Installation of Wheelebrator Projectile Shotblast Equipment, Bldg (AO-13) 102, Undated

Equipment layout Plan Bldg 94 SOP-14, undated

Demo of Bldgs 432,433,434,435 and 436 Site and Utility Demo Plan, Undated

Install Spark Proof Floor & Drain - Rocket Test Bldg 437, undated

Hazardous Waste Areas station Map, Attachment L, Undated

Aerial Photographs and Maps:

Flight ID AXK-1938, Frame AXK-29-22. Scale 1:20,000. 1938.

Flight ID C-11351, Frames 7-11. Scale 1:24,000. 1947.

Flight ID AXK-1953, Frame IK-15. Scale 1:20,000. 1952.

Flight ID C-22555, Frames 29-40, 29-42, 30-41. Scale 1:14,000. 1956.

Flight ID C-23023, Frames 1-41. Scale 1:36,000. 1958.

Flight ID C-23870, Frames 471, 547. Scale 1:14,000. 1960.

Flight ID PAI-LA-BASIN, Frame 1933-01-11. Scale 1:36,000. 1965.

Flight ID TG-2400, Frames 2-92. Scale 1:28,000. 1968.

Flight ID AMI-OC-70, Frame 5164. Scale 1:36,000. 1970.

Flight ID TG-7400, Frames 12-34. Scale 1:24,000. 1974.

Flight ID TG-7700, Frames 11-16. Scale 1:24,000. 1977.

Flight ID AMI-OC-83, Frame 11601. Scale 1:36,000. 1983.

Flight ID AMI-OC-89, Frame 12386. Scale 1:36.000. 1989.

This page intentionally is blank.

Appendix B: Project Source Data – General

All project source data is included in the enclosed CD.

Appendix C: Project Source Data – Site-Specific

All project source data is included in the enclosed CD.

Appendix C-1: Primer/Salvage Yard

Appendix C-2: Port of Long Beach Mitigation Pond

Appendix C-3: Buildings 101-102 Evaporation Ponds

Appendix C-4: Building 94 Settling Basin

Appendix C-5: Explosives Drop Test Tower (Building 436)

Appendix C-6: Westminster Port of Long Beach Fill Area

Appendix D: Ordnance Technical Data Sheets

<u>Ordnance Technical Data Sheet</u>
.22 Caliber Small Arms

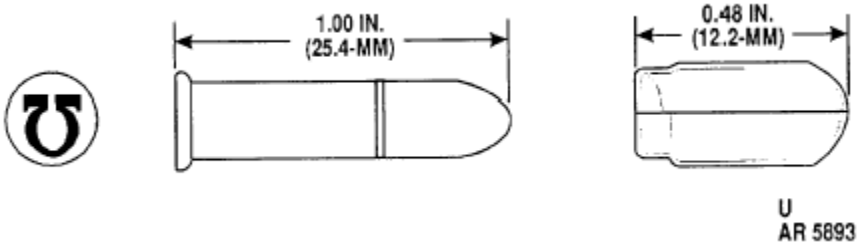

Nomenclature:	.22 Caliber Ammunition
Ordnance Family:	Small Arms
DODIC:	A086
Filler:	Single or Double Base Powder*
Filler weight:	0.162 g (2.5 gr)
Item weight:	26.96 g (416 gr)
Projectile Weight:	2.62 g (40.5 gr)
Diameter:	5.59 mm **(**.22 in)
Length:	25.4 mm (1 in)

Usage: Sub-caliber Rifle M2A1; Caliber .22 Rifle; Remington Models 40X and M513T; Steven's Model 416-2; Winchester Models 52 and 75; Machine Gun Trainers M3 and M4; pistols for gallery practice and training purposes. The cartridge is intended for use against small game for survival purposes.

Description: BALL Cartridge. The cartridge is identified by a plain bullet tip.

Reference: Army Technical Manual TM 9-1300-200 Ammunition, General Oct 1969
Army Field Manual FM 9-13 Ammunition Handbook Jan 1981

* **Single Base Propellant:** Single base propellants contain nitro cellulose as their chief ingredient. Single-base compositions are used as low-pressure propellants, such as those used in small arms ammunition. They may contain a stabilizer, inorganic nitrates, nitro-compounds, metallic salts, metals, carbohydrates and dyes.

Double Base Propellant: Double base propellants contain nitrocellulose and a liquid organic nitrate, such as nitroglycerine. As with single base, stabilizers and additives may be present. Double base propellants are used in cannon, small arms, mortars, rockets, and jet propulsion units.

Ordnance Technical Data Sheet

U.S. Rocket Warhead, 3.5 in, White Phosphorus (WP)

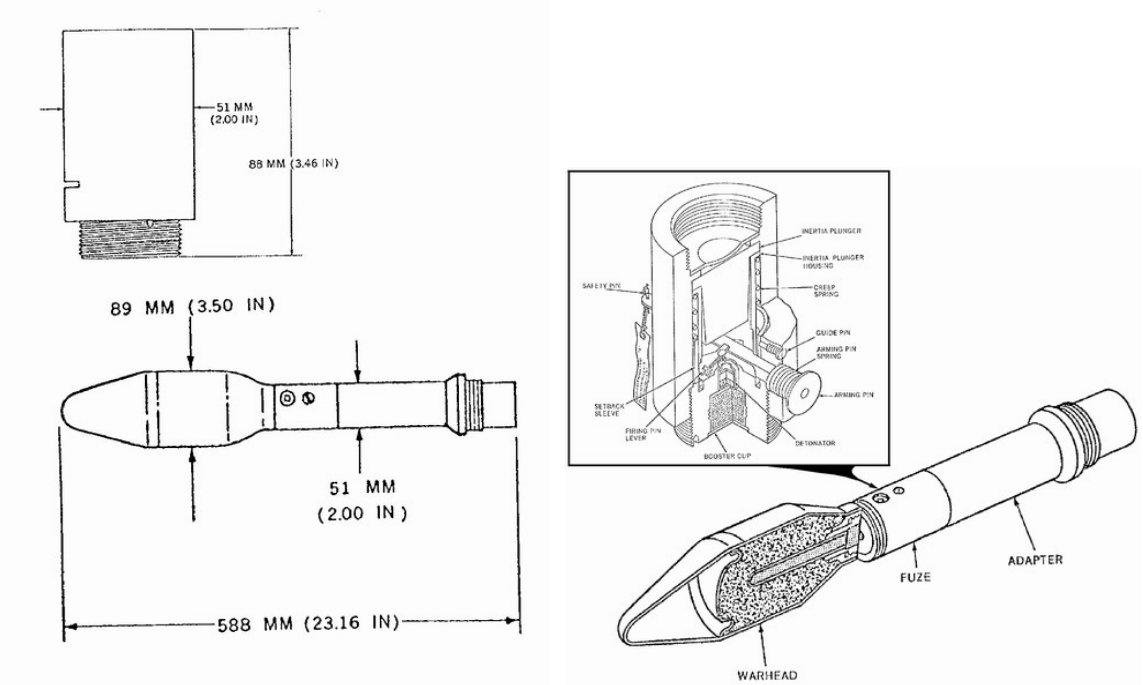

Nomenclature:	U.S. Rocket Warhead, 3.5-Inch Smoke, WP, Aircraft
Ordnance Family:	Rockets
DODIC:	Not Provided
Filler:	RDX*/WP**
Filler weight:	1.00 kg (2.2 lbs)
Item weight:	4.90 kg (10.8 lbs)
Diameter:	89.00 mm (3.5 in)
Length:	588.00 mm (23.15 in)
Maximum Range:	Not Provided
Fuze:	M404A1 base detonating (BD)

Usage: The figure shows the appearance, dimensions, and general arrangement of the 3.5 inch warhead. This is a 3.5-inch WP rocket warhead. It uses the M404A1 (modified) fuze which is a direct-arming, base-detonating (BD), non-delay fuze. The warhead and fuze are coupled to a 2.75-inch rocket motor by an adapter and are used against aircraft.

Description: The fuze is painted olive drab or black, and has the designation and loading information stamped in the body. Older warheads are painted gray with yellow markings.

Reference: ORDATA Online.

***RDX**, cyclotrimethylenetrinitramine, one of the most powerful explosives, is commonly known as cyclonite. It is a white crystalline solid having a melting point of +397°F and is very stable. It has slightly more power and brisance than PETN. It is more easily initiated by mercury fulminate than is tetryl. RDX has been used mainly in mixtures with other explosives, but can be used by itself as a sub-booster, booster, and bursting charge. It is also combined with nitrohydrocarbons, which permit cast-loading, or with waxes or oils for press-loading. It has a high degree of stability in storage.

****White phosphorus (WP) -** is a white to light yellow, wax like, and luminous substance (phosphorescent in the dark). On ignition it produces a yellow-white flame and dense white smoke. WP is poisonous when taken internally. Its smoke or fumes are not. When dispersed by ammunition, as small particles, it ignites spontaneously on exposure to air and continues to burn on contact with solid materials, even when embedded in human flesh. WP smoke is unpleasant to breathe but harmless; the particles, however, will poison food and water. It is used in bursting-type projectiles, artillery and mortar shell, grenades, rockets, and bombs. It is used as an igniter in incendiary ammunition that contains flammable fuels. WP, when used in projectiles and burst on terrain covered with soft deep snow, is smothered and produces approximately 75 percent less smoke.

Ordnance Technical Data Sheet

U.S. Cartridge .30 Caliber, Ball

CARTRIDGE, CALIBER .30, CARBINE, BALL, M1

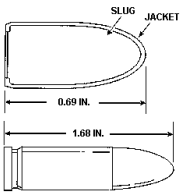

Nomenclature:	Cartridge, .30 caliber, Ball
Ordnance Family:	Small Arms Ammunition
DODIC:	A182
Propellant:	Single or Double Base Powder**
Filler:	Lead or Copper Clad Lead
Filler weight:	Not Provided
Item Weight:	Not Provided
Diameter:	7.62 mm (.30 in)
Length:	42.67 mm (1.68 in)
Maximum Range:	2012.00 m (2,200 yds)
Fuze:	Percussion

Usage: Standard general purpose small arms ammunition for the M-1 and M1A1 .30 caliber Carbine.

Description: The cartridge case is brass comprised of 70 percent copper and 30 percent zinc. The bullet is copper clad lead. The propelling charge is either single or double base powder. Ball ammunition is unpainted; tracer ammunition has the tip painted either orange or red.

Reference: Army Technical Manuel TM 9-1300-200.

* Single-base propellant - Contains only one explosive ingredient, normally nitrocellulose.

* Double-base propellant - Contains two explosive ingredients, commonly nitrocellulose and nitroglycerin.

Ordnance Technical Data Sheet

U.S. Cartridge, .38 Caliber, Pistol, Special

Nomenclature:	.38 caliber pistol ammunition
Ordnance Family:	Small Arms
DODIC:	A408
Propellant:	Single or Double Base Powder*
Filler:	Lead bullet
Filler weight:	10.24 g (158 gr)
Item weight:	12.7 g (196 gr)
Projectile Weight:	10.24 g (158 gr)
Diameter:	9.65 mm (.38 in)
Length:	29.97 mm (1.8 in)
Fuze:	Percussion

Usage: Caliber .38 weapons. The cartridge is for CONUS-guard or security use.

Description: BALL Cartridge (un-jacketed lead). The cartridge is identified by a plain bullet tip.

Reference: Midas, Army Technical Manuel TM 43-0001-27

***Single Base Propellant:** Single base propellants contain nitro cellulose as their chief ingredient. Single-base compositions are used as low-pressure propellants, such as those used in small arms ammunition. They may contain a stabilizer, inorganic nitrates, nitro-compounds, metallic salts, metals, carbohydrates and dyes.

Double Base Propellant: Double base propellants contain nitrocellulose and a liquid organic nitrate, such as nitroglycerine. As with single base, stabilizers and additives may be present. Double base propellants are used in cannon, small arms, mortars, rockets, and jet propulsion units.

Ordnance Technical Data Sheet

U.S. Rocket, 7.2-IN, Hedgehog

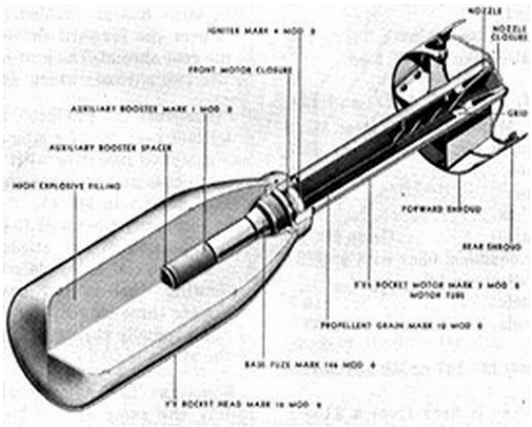

Nomenclature:	U.S. Rocket, 7.2-inch, Hedgehog
Ordnance Family:	Rockets
DODIC:	Not Provided
Propellant:	Smokeless Powder*
Filler:	TNT** or Torpex***
Filler weight:	± 15.88 kg (35 lbs)
Item weight:	29.88 kg (65 lbs)
Diameter:	182.88 mm (7.2in)
Length:	980.44 mm (38.6in)
Maximum Range:	228.6 m (250 yds)
Fuze:	Hydrostatic/Contact Fuze

Usage: Ship launched Anti-submarine weapon.

Description: The rocket consists of a flat-nosed head with a conical tail fairing and parallel sides. The adapter and fuze thread into the nose. The motor unit consists of a smokeless powder cartridge with primer, which is lodged forward in the tail tube, the tube fitting over a firing post. The primer is detonated by electric contacts in the post. This charge is for use on Projectors Mk 10 and Mk 11.

Reference: ORDATA Online

* **Smokeless powder** is essentially gelatinized nitrocellulose and is manufactured in the form of flakes, strips, pellets, or perforated cylindrical grains. Smokeless powder is made in different shapes to obtain certain types of burning. The cylindrical grains are made in various diameters and lengths, Grains vary in diameter from 0.032 inch for caliber 30

cartridges to 0.947 inch for 16-inch propelling charges, and varies in corresponding lengths from 0_085 inch to 2.170 inches. For small-size grains either no perforation or a single perforation is required. However, for larger grains, seven equally spaced perforations are present in order to have large burning surface area. The critical dimension is the web size, that is, the average thickness of the powder between the perforations. In color, the grains vary from light amber to a deep brown or black. Nitrocellulose smokeless propellants are used as the propellant for small-arms and larger-caliber ammunition. The perforated form of grain is the one most commonly used in United States military powders. Single perforated grains are used for small -arms, minor-caliber weapons, and certain howitzers. Powders with seven perforations are used for larger-caliber weapons.

**** TNT** (2, 4, 6-trinitrotolucne) TNT is relatively insensitive to shock or friction and can be stored indefinitely. In a refined form, it is one of the most stable high explosives. In the pure state, it is crystalline and nearly white, resembling a light brown sugar. When unconfined and ignited by a flame, it burns slowly and does not explode. It does however; emit a heavy, oily, black smoke. The burning or rapid heating of large quantities in a closed vessel may cause a violent detonation.

***** TORPEX** is RDX/TNT/Aluminum/Wax desensitizer. It was used in several types of torpedoes and mines. Due to it sensitivity to bullet impact, the first weapons loaded were ones for which there would be the least possibility of rifle bullet and fragment attack, namely, submarine delivered mines and torpedoes. The loading stations were advised that they must take adequate care in mixing and loading and in the handling of the loaded items. It was declared that the British had been able to handle it without incident for 2 years and that the risk was worth the advantage gained in its underwater power.

Ordnance Technical Data Sheet

U.S. Bomb Unit, Dummy (BDU), BDU-28/B

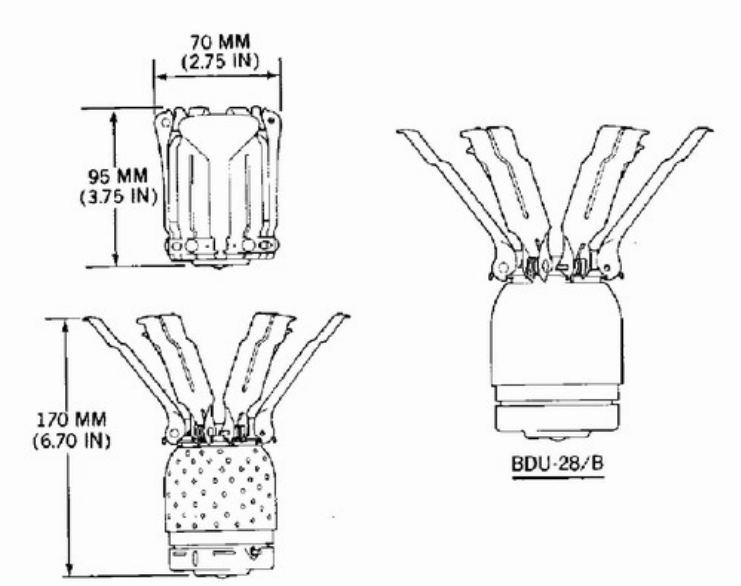

Nomenclature:	BDU-28/B, sub-munitions, Training
Ordnance Family:	Submunitions
DODIC:	Not provided
Filler:	None
Filler weight:	Not Provided
Item weight:	785.00 g (1.73 lbs)
Diameter:	70.00 mm (2.76 in)
Length:	95.00 mm (3.74 in)
Maximum Range:	Not Provided
Fuze:	None

Usage: The BDU-28/B is a small, Drag-vane stabilized, inert dummy bomb used for training ground handling and loading crews

Description: The body of the BDU-28/B is painted the same red color as the BDU-27/B but has no circumferential band. The vanes are anodized greenish-gold and the end-cap is anodized blue. Markings are stenciled in black on the end cap.

Reference: ORDATA Online, MIDAS.

Ordnance Technical Data Sheet

U.S. Bomb Unit, Fragmentation (FRAG), BLU-18/B & Tube Assembly

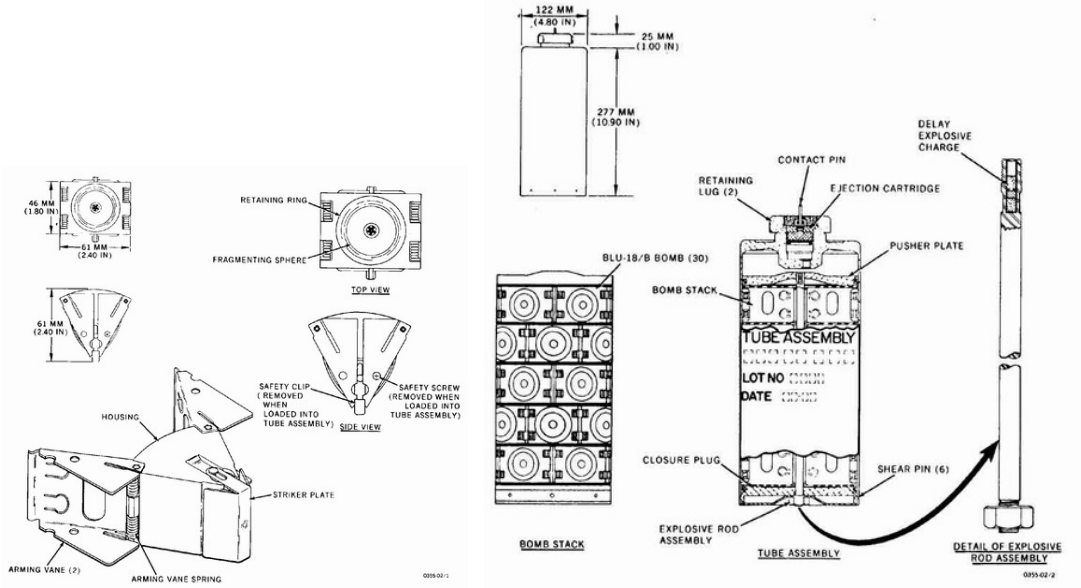

Nomenclature: BLU-18/B, Bomb Unit, FRAG
Ordnance Family: Sub-munitions
DODIC: Not Provided
Filler: RDX *
Filler weight: 21.00 g (.7408 oz)
Item weight: 227.00 g (8.007 oz)
Diameter: 46.00 mm (1.811 in)
Length: 61.00 mm (2.402 in)
Maximum Range: Not Provided
Fuze: Impact Fired

Usage: This is an aerial dispensed, vane-armed, impact-actuated, rebounding, fragmentation, antipersonnel bomb that provides an airburst a short time after impact.

Description: The bomb has unpainted aluminum housing, black arming vanes, and a black striker plate. It has no markings. The tube assembly has an unpainted aluminum exterior with black markings.

Reference: ORDATA Online.

***RDX**, cyclotrimethylenetrinitramine, one of the most powerful explosives, is commonly known as cyclonite. It is a white crystalline solid having a melting point of +397°F and is very stable. It has slightly more power and brisance than PETN. It is more easily initiated by mercury fulminate than is tetryl. RDX has been used mainly in mixtures with other explosives, but can be used by itself as a sub-booster, booster, and bursting charge. It is also combined with nitrohydrocarbons, which permit cast-loading, or with waxes or oils for press-loading. It has a high degree of stability in storage.

Ordnance Technical Data Sheet

U.S. Bomb Unit, Fragmentation (FRAG), BLU-24C/B & BLU-66B/B (Jungle/All-Terrain Bomb)

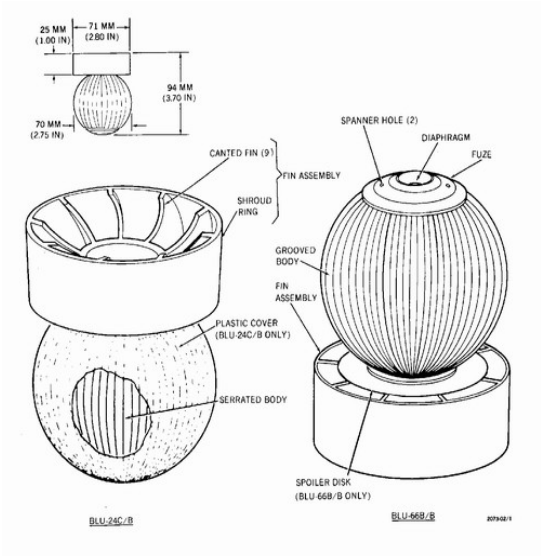

Nomenclature:	BLU-24C/B & BLU-66 B/B, FRAG
Ordnance Family:	Submunitions
DODIC:	Not Provided
Filler:	Cyclotol*
Filler weight:	125.00 g (4.409 oz)
Item weight:	907.00 g (31.99 oz)
Diameter:	70.00 mm (2.576 in)
Length:	94.00 mm (3.701 in)
Maximum Range:	Not Provided
Fuze:	Spin-decay-fired

Usage: These are small, aerial dispensed, fin-stabilized, antipersonnel, anti-material, jungle penetrating fragmentation (frag) bombs. They are centrifugal armed (spin armed) and fired when centrifugal force decreases (spin-decay fired) or when the bomb impacts water or mud.

Description: The bomb body is yellow, with designation, lot number, and date of manufacture stenciled in black on the side of the body. The fuze on the front of the bomb is unpainted. The fin assembly is white.

Reference: ORDATA Online.

*** Cyclotol –** a military high explosive, is produced by mixing cyclo-1,3,5-trimethylene-2,4,6-trinitramine (or RDX and 2,4,6-trinitrotoluene (TNT) to a specified ratios. Normally 75/25 (RDX/TNT).

Ordnance Technical Data Sheet

U.S. Bomb Unit, Fragmentation (FRAG), BLU-26/B, BLU-36/B, BLU-59/B, & BLU-36(T-1)/B

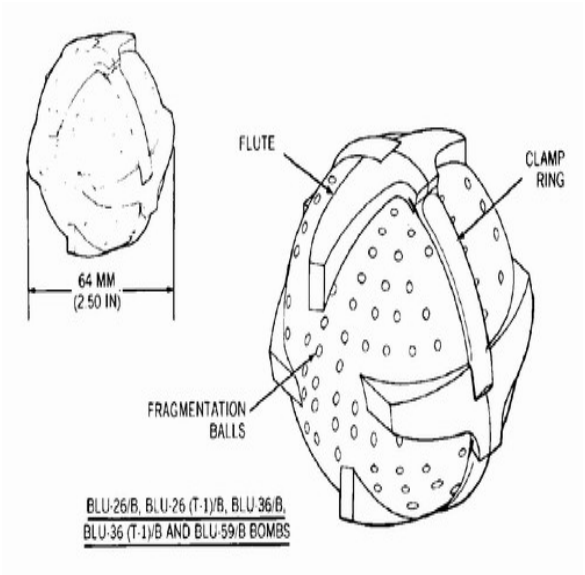

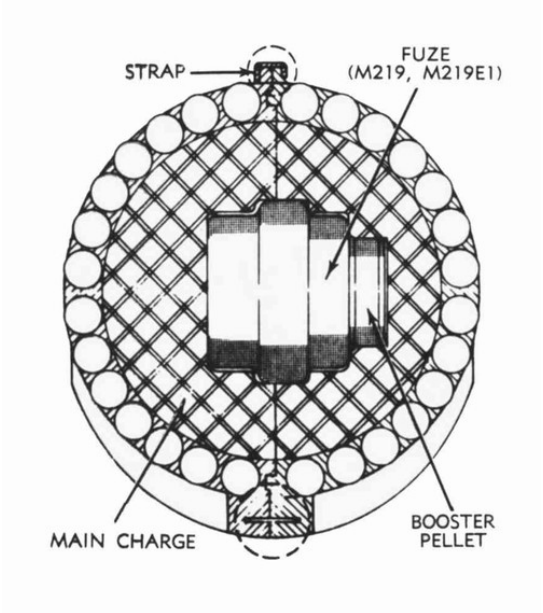

Nomenclature:	BLU-26, 36, 59, FRAG
Ordnance Family:	Sub-munitions
DODIC:	Not Provided
Filler:	Cyclotol*
Filler weight:	85.00 g (2.998 oz)
Item weight:	454.00 g (16.01 oz)
Diameter:	64.00 mm (2.52 in)
Length:	19.51 mm (.7842 in)
Maximum Range:	Not Provided
Fuze:	Impact or Time delay fired

Usage: These are all small, aerial dispensed, centrifugal armed, high-explosive fragmentation bombs. The bombs all consist of two hemispheres held together by a crimp ring. The BLU-26/B bombs are impact-fired and the BLU-36/B and BLU-59/B bombs are time-delay-fired. The BLU-26(T-1)/B and BLU-36(T-1)/B are training versions of the BLU-26/B and BLU-36/B, respectively. These training bombs contain a live fuze but no main charge, and are used for fuze reliability testing and establishing delivery tactics. The outer wall has a weakened area which ruptures when the fuze functions.

Description: These bombs are olive drab with a small yellow dot on one hemisphere. Designation and loading data may be stenciled in yellow on all the bombs. The BLU-26(T-1)/B and BLU-36(T-1)/B are painted blue with white markings.

Reference: ORDATA Online.

*** Cyclotol –** a military high explosive, is produced by mixing cyclo-1, 3, 5-trimethylene-2, 4, 6-trinitramine (or RDX and 2, 4, 6-trinitrotoluene (TNT) to a specified ratios. Normally 75/25 (RDX/TNT).

Ordnance Technical Data Sheet

U.S. Bomb Unit, Fragmentation (FRAG), Bomb Live Unit (BLU), BLU-3/B & BLU-27/B Simulated, spotting charge

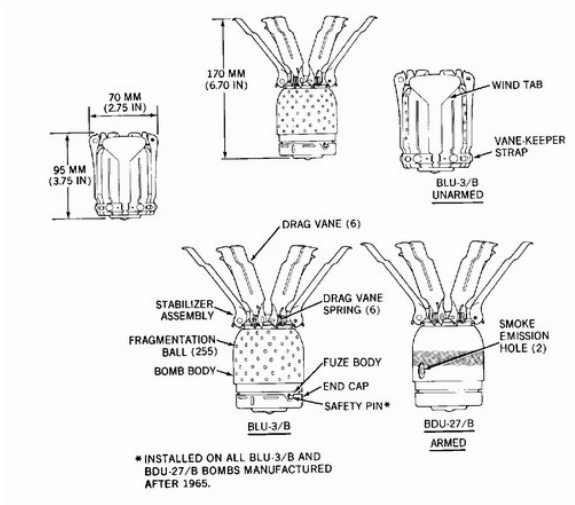

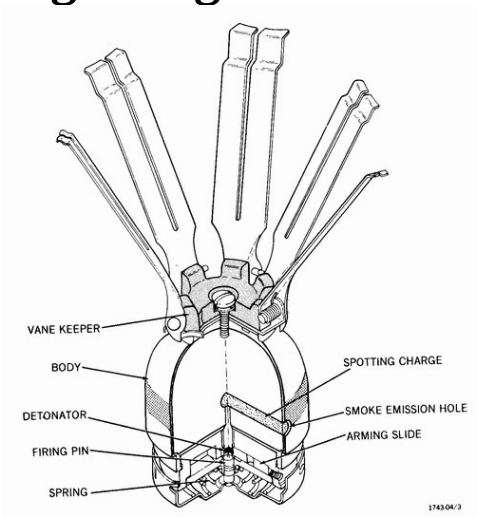

Nomenclature:	BLU-3/B & BLU-27/B
Ordnance Family:	Submunitions
DODIC:	E269
Filler:	RDX*
Filler weight:	165.00 g (5.82 oz)
Item weight:	785.00 g (1.73 lbs)
Diameter:	70.00 mm (2.56 in)
Length:	95.00 mm (3.74 in)
Maximum Range:	Not Provided
Fuze:	Impact Fired

Usage: The BLU-3/B is a small, aerial dispensed, drag-vane-stabilized, impact fired, antipersonnel (APERS), fragmentation bomb. The BDU-27/B is a small, aerial dispensed, drag-vane stabilized, impact-fired, black-powder-loaded, practice spotter bomb.

Description: The body of the BLU-3/B is painted bright yellow and the end cap is anodized gold. The drag vanes are usually anodized, but may be painted. The vane keeper is black plastic. The bomb body of the BLU-3/B is aluminum embedded with steel fragmentation balls.

Reference: ORDATA

***RDX**, cyclotrimethylenetrinitramine, one of the most powerful explosives, is commonly known as cyclonite. It is a white crystalline solid having a melting point of +397°F and is

very stable. It has slightly more power and brisance than PETN. It is more easily initiated by mercury fulminate than is tetryl. RDX has been used mainly in mixtures with other explosives, but can be used by itself as a sub-booster, booster, and bursting charge. It is also combined with nitrohydrocarbons, which permit cast-loading, or with waxes or oils for press-loading. It has a high degree of stability in storage.

Ordnance Technical Data Sheet

U.S. Bomb Unit, Fuel Air Explosive (FAE), BLU-73/B (Obsolete) & BLU-73A/B

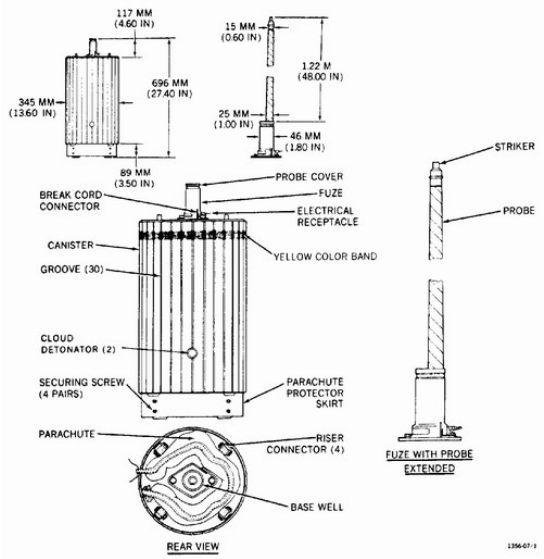

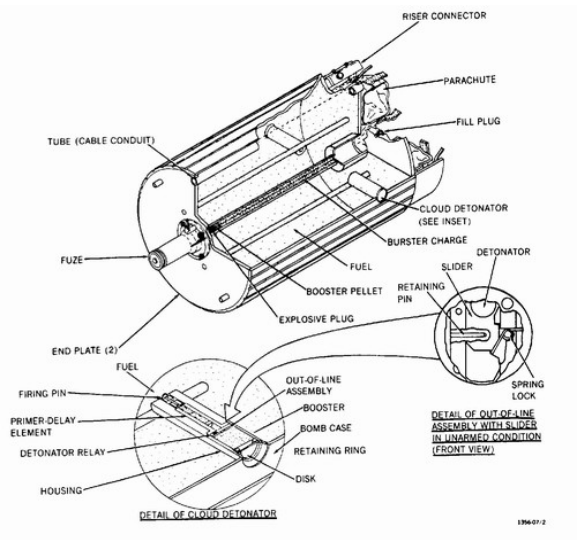

Nomenclature:	BLU-73/B, FAE
Ordnance Family:	Submunitions
DODIC:	Not Provided
Filler:	Ethylene Oxide (ETHO)*
Filler weight:	59.00 kg (130.1 lbs)
Item weight:	113.00 kg (249.1 lbs)
Diameter:	345.00 mm (13.58 in)
Length:	969.00 mm (27.4 in)
Maximum Range:	Not Provided
Fuze:	Not provided

Usage: These are aerial dispensed, parachute-stabilized, fuel-air-explosive (FAE) bombs which contain a self-destruct unit in the fuze. They are used to clear mines, booby traps, foliage, and enemy personnel from helicopter landing zones.

Description: These bombs are painted reddish-brown and have a yellow band around the forward edge to indicate explosive content. The parachute is orange. The fuze body is unpainted and may have a black anodized finish. It has a rectangular metal foil nameplate with the fuze designation on the side.

Reference: ORDATA Online.

***Ethylene Oxide** – is extremely flammable liquid and gas under pressure. May form explosive mixtures with air. Highly reactive. May be harmful if inhaled and may cause delayed lung injury. Repertory system and nervous system damage. Inhalation may

cause dizziness or drowsiness. Liquid contact may cause frostbite. May cause allergic skin reaction. Harmful if swallowed. May cause adverse blood effects liver and kidney damage based on animal data. Cancer and reproductive hazard.

Ordnance Technical Data Sheet
U.S. Cartridge .30 Caliber, Carbine, Ball, M1

CARTRIDGE, CALIBER .30, CARBINE, BALL, M1

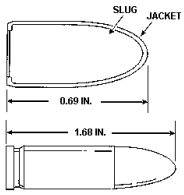

Nomenclature:	M1, Cartridge, Carbine, .30 caliber, Ball
Ordnance Family:	Small Arms Ammunition
DODIC:	A182
Propellant:	Single or Double Base Powder**
Filler:	Lead or Copper Clad Lead
Filler weight:	Not Provided
Item Weight:	Not Provided
Diameter:	7.62 mm (.30 in)
Length:	42.67 mm (1.68 in)
Maximum Range:	2012.00 m (2,200 yds)
Fuze:	Percussion

Usage: Standard general purpose small arms ammunition for the M-1 and M1A1 .30 caliber Carbine.

Description: The cartridge case is brass comprised of 70 percent copper and 30 percent zinc. The bullet is copper clad lead. The propelling charge is either single or double base powder. Ball ammunition is unpainted; tracer ammunition has the tip painted either orange or red.

Reference: Army Technical Manuel TM 9-1300-200.

* Single-base propellant - Contains only one explosive ingredient, normally nitrocellulose.

* Double-base propellant - Contains two explosive ingredients, commonly nitrocellulose and nitroglycerin.

Ordnance Technical Data Sheet

U.S. Bomb Fuze, M100 Series

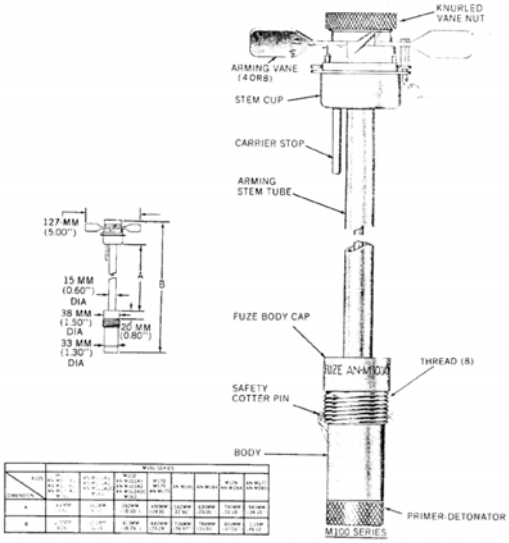

Nomenclature: U.S. Bomb Fuze, M100 series fuzes.
Ordnance Family: Bomb
DODIC: Not Provided
Filler: Black Powder
Filler weight: 1.00 g (.035 oz)
Item Weight: Not Provided
Diameter: 38.00 mm (1.495 in)
Length: Various (mission dependent)
Maximum Range: Not Provided
Fuze: Vane-Armed, Impact Inertia fired, Non-delay or Short-delay

Usage: These are vane-armed, impact inertia fired, non-delay or short-delay bomb tail fuzes.

Description: These fuzes are no longer in the U.S. inventory but are known to be used by others. The M100 series is composed of the M100, AN-M100A1, AN-M100A2, AN-M100A2C, M101, AN-M101A1, AN-M101A2, AN-M101A2C, M102, AN-M102A1, AN-M102A2, AN-M102A2C, M160, M161, M162, M172, M175, AN-M175, M176, AN-M177, AN-M184, AN-M185, AN-M194, and AN-M195 fuzes. These fuzes differ externally from each other in the arming stem tube length and, consequently, in overall length. The fuze designation and loading information may be stamped or stenciled on the cylindrical surface of the fuze body cap. The AN-M100A2C, AN-M101A2C, AN-M102A2C, M160, M161, M162, M175, AN-M175, M176, and AN-M177 fuzes have a 76-millimeter (3-inch) yellow band painted on the arming stem tube to indicate a longer arming time.

Reference: ORDATA Online.

Ordnance Technical Data Sheet

U.S. Grenade, Incendiary, TH3, AN-M14

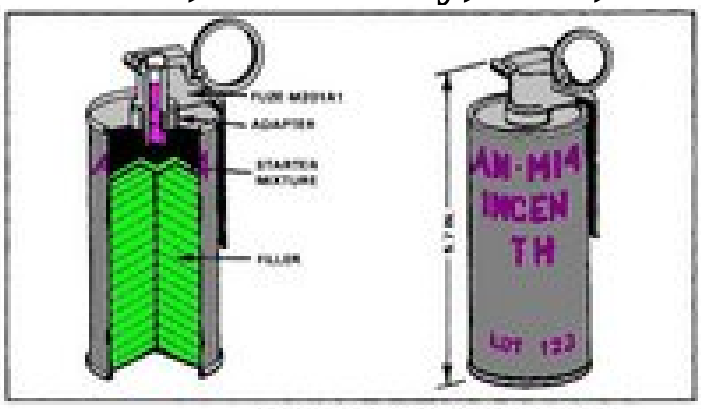

AN-M14 TH3 incendiary grenade.

Nomenclature:	AN-M14, TH3, Grenade, Incendiary
Ordnance Family:	Grenades
DODIC:	Not Provided
Filler:	Thermite *
Filler weight:	Not Provided
Item Weight:	Not Provided
Diameter:	64.00 mm (2.52 in)
Length:	145.00 mm (5.7 in)
Maximum Range:	Not Provided
Fuze:	M2000A1 Impact, powder time fuze

Usage: Thermite Grenade is an incendiary type grenade emitting intense heat and flame. It contains filler that burns for approximately 40 seconds at a temperature of 4,000 degrees (F). A portion of the filler turns into molten iron that produces intense heat, igniting or fusing whatever it touches.

Description: Incendiary, grenade, TH3, AN-M14 is 5 inches in length. The diameter is 2.5 inches. The filling is thermate, thermite, and nitrates. The fuse is a M2000A1 with a 2 second delay. A clamp of flat steel strapping and a nail are packed in the container with each grenade; these are used to hold the grenade in position, as it has a tendency to move upon ignition. The Fuze M2000A1 is threaded into the top of the grenade body. The color is blue gray.

Reference: ORDATA Online.

* **Thermite –** a mixture of powdered or granular aluminum and powdered iron oxide. When combined with other substances, such as binders, the material is termed a "thermate". All such materials react vigorously when heated to the combustion temperature of aluminum. This reaction produces aluminum oxide, elemental iron, and sufficient heat to melt the iron. The reaction temperature is approximately 2200ºC.

Ordnance Technical Data Sheet

U.S. Grenade, Hand, Smoke, M18

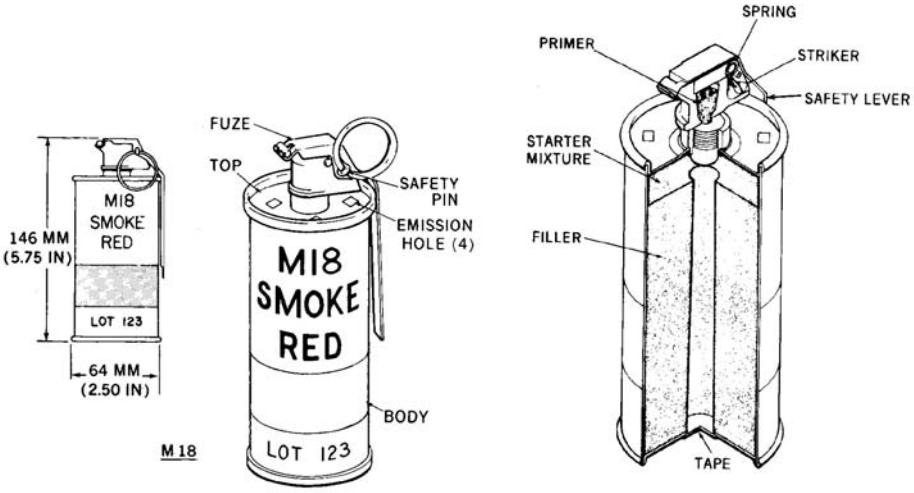

Nomenclature:	M18, Grenade, Hand, Smoke
Ordnance Family:	Grenades
DODIC:	Not Provided
Filler:	Smoke Mix, Colored*
Filler weight:	326.03 g (11.5 oz)
Item weight:	539.00 g (19.01 oz)
Diameter:	64.00 mm (2.52 in)
Length:	146.00 mm (5.748 in)
Maximum Range:	Not provided
Fuze:	Pyrotechnic delay-igniting fuze (2 sec delay)

Usage: The M18 is a hand-thrown, smoke grenade which emits red or yellow, or violet smoke for 50 to 90 seconds. The M18 may also emit green smoke. These grenades use a pyrotechnic, delay-igniting fuze which provides an approximate 2-second delay.

Description: The M18 grenade may be olive drab with a light green band around the lower body and nomenclature and smoke color stenciled in light green, or light green with stenciled the color of the smoke. The top of the grenade is painted the color of the smoke.

Reference: ORDATA Online.

* Smoke grenades. Military smoke grenades are made either with phosphorus, or with sugar as a fuel mixed with an oxidizer such as potassium chlorate, along with organic dyes to generate colored smoke. Sugar burns at a low temperature and will not degrade the dyes. Tanks and other armored vehicles often mount smoke-grenade launchers to

allow them to lay down a smokescreen for concealment, and smoke grenades and rocket warheads are often used for target marking and helicopter landing zone designation.

Ordnance Technical Data Sheet

U.S. Cartridge, .50 Caliber, M2 & M85

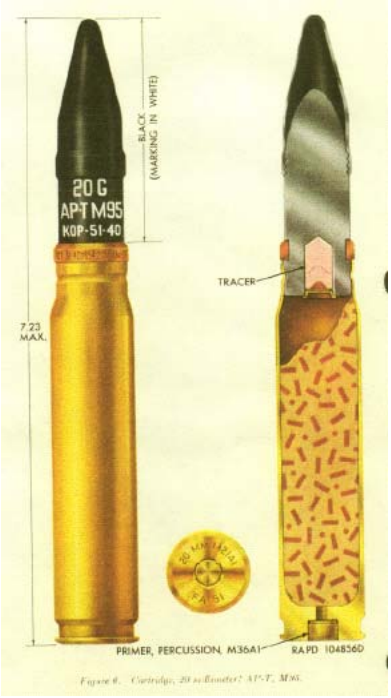

Nomenclature:	M2, cartridge, .50 cal, Ball,
Ordnance Family:	Small Arms
DODIC:	A522
Propellant:	Single or Double Base Powder*
Filler:	Lead, Steel with copper cladding
Filler weight:	Various
Item Weight:	117.5 g (4.15 oz)
Diameter:	12.75 mm (.50 in)
Length:	138.40 mm (5.45 in)
Maximum Range:	6.80 km (7430 yds)
Effective Range:	2000.00 m (2187 yds)
Fuze:	Percussion

Usage: Machine Guns, Caliber .50, M2 and M85. The cartridge is intended for use against personnel or unarmored targets.

Description: Ball Cartridge. The cartridge is identified by a blain pullet tip.

Reference: Army Technical Manuel TM 43-0001-27.

***Single Base Propellant:** Single base propellants contain nitro cellulose as their chief ingredient. Single-base compositions are used as low-pressure propellants, such as those

used in small arms ammunition. They may contain a stabilizer, inorganic nitrates, nitro compounds, metallic salts, metals, carbohydrates and dyes.

Double Base Propellant: Double base propellants contain nitrocellulose and a liquid organic nitrate, such as nitroglycerine. As with single base, stabilizers and additives may be present. Double base propellants are used in cannon, small arms, mortars, rockets, and jet propulsion units.

Ordnance Technical Data Sheet

U.S. Fuze, Grenade, M201A1 & M201A2

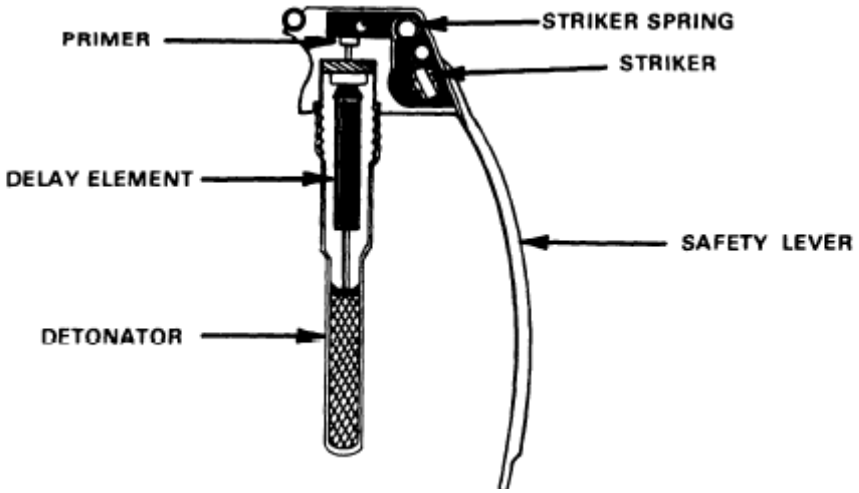

Nomenclature: M201A1 & M201A2, Fuze, Grenade
Ordnance Family: Grenade
DODIC: Not Provided
Filler: PETN
Filler weight:
Item Weight:
Diameter:
Length:
Maximum Range:
Fuze:

Usage:

Description:

Reference: ORDATA Online.

Ordnance Technical Data Sheet

M21, Cartridge Actuated Cutter

CUTTER, CARTRIDGE ACTUATED: M21 (M500)

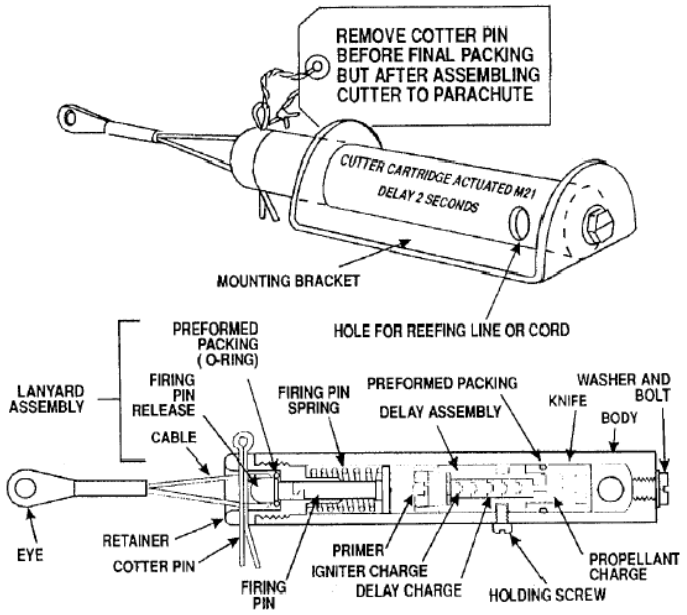

Nomenclature: M21**,** Cartridge Actuated Cutter
Ordnance Family: Cartridge Actuated Device (CAD)
DODIC: M500
Filler: Bullseye black powder
Filler weight: 1.81 g (.064 oz)
Item weight: 317.50 g (11.7 oz)
Diameter: 1.91 cm (.75 in)
Length: 15.24 cm (6 in)
Fuze: Percussion

Usage: The M21 reefing line cutter is a cartridge actuated, one shot, disposable mechanical unit with the cartridge sealed internally, Major components consist of case, firing pin assembly, lanyard, knife assembly delay assembly and cotter pin.

Description: The M21 reefing line cutter is a cartridge actuated, one shot, disposable mechanical unit with the cartridge sealed internally. Major components consist of case, firing pin assembly, lanyard, knife assembly, delay assembly and cotter pin.

Reference: Army Technical Manual TM 43-0001-39, Army Technical Manual Data Sheets for Cartridges, Cartridge Actuated Devices and Propellant Actuated Devices (FSC 1377) December 1991.

Ordnance Technical Data Sheet

U.S. Grenade Fuze, M228

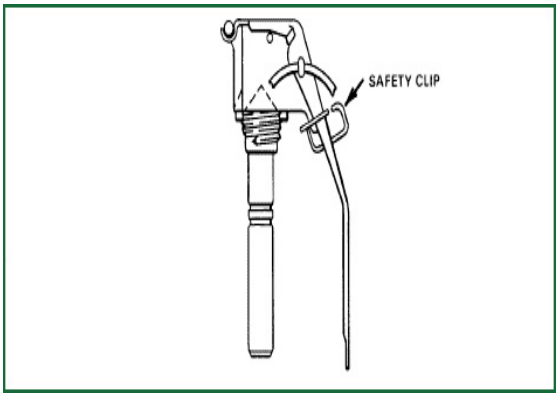

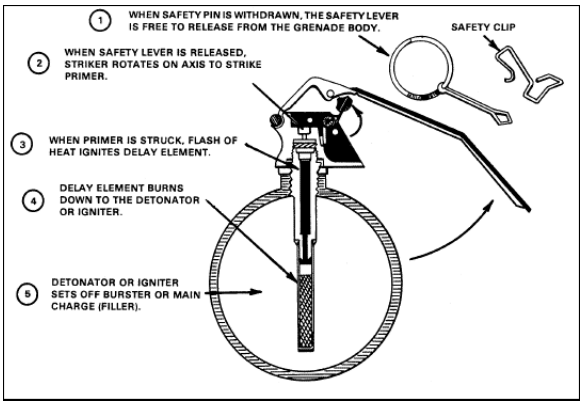

Nomenclature: Grenade Fuze, M228,
Ordnance Family: Grenade
DODIC: G878
Maximum Range: Not Provided
Fuze: Pyrotechnic delay igniting fuze

Usage: The M228 is a pyrotechnic delay igniting fuze used in conjunction with the M69 Grenade body, as a trainer for the M67 Fragmentation Hand Grenade. The fuze is equipped with a steel safety Pin and Pull Ring, and a safety clip. The safety pin and the safety clip are removed to arm the grenade while holding the lever tight to the grenade body. The M228 emits a small puff of smoke when activated.

Description: When the lever is released, the spring-loaded striker rotates and initiates the primer. The primer ignites a delay element, which initiates the igniter. The igniter produces an audible signal and a white smoke charge.

Reference: ORDATA Online.

Ordnance Technical Data Sheet

U.S. Rocket Warhead, 2.75 in, Practice, M230

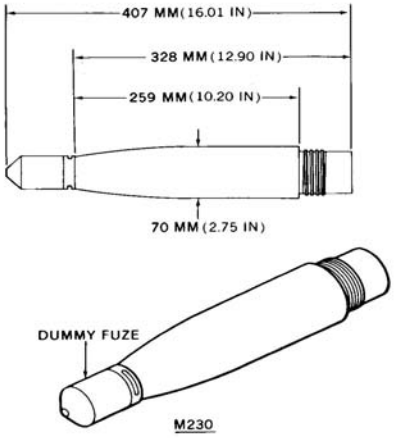

Nomenclature:	M230, Warhead, 2.75 in, Practice
Ordnance Family:	Rocket
DODIC:	Not Provided
Filler:	None
Filler weight:	Not Provided
Item weight:	3.90 kg (8.6 lbs)
Diameter:	70.00 mm (2.75 in)
Length:	407.00 mm (16.7 in)
Maximum Range:	Not Provided
Fuze:	None

Usage: These are non-explosive practice warheads used with 2.75-inch practice rockets for target practice, or with dummy rockets for instruction and display. In addition, the Mk 1 Mod 3 and Mk 61 Mod 0 practice warheads are used with the Mk 49 Mod 0 line-throwing rocket motor.

Description: The warheads are painted blue, with the designations stenciled in white.

Reference: ORDATA Online.

Ordnance Technical Data Sheet

U.S. Cartridge, 12 Gage, Shotgun, M247

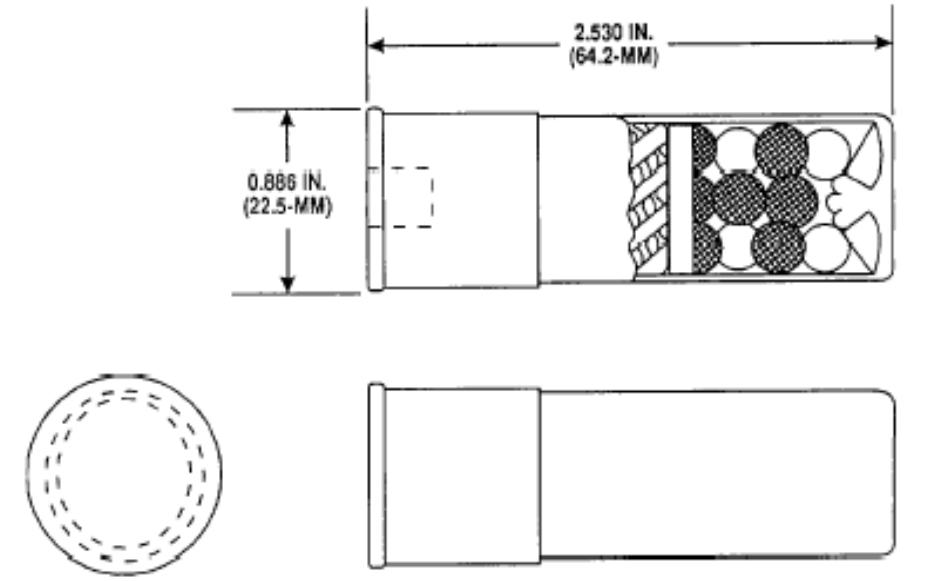

Nomenclature:	M247, Cartridge, 12 Gage, Shotgun,
Ordnance Family:	Small Arms
DODIC:	A011
Propellant:	Smokeless Powder*
Filler:	Lead Shot
Filler weight:	Not provided
Item weight:	740.00 g (26.1 oz)
Diameter:	22.50 mm (.886 in)
Length:	64.20 mm (2.53 in)
Maximum Range:	Not Provided
Fuze:	Percussion

Usage: Military issue, riot-type shotgun, 20-in barrel cylinder bore. The cartridge is intended for use against small game and for riot control weapons.

Description: The cartridge case may be paper or plastic, and is loaded with smokeless powder and No. 4 hard chilled shot.

Reference: Army Technical Manuel TM43-0001-27

***Smokeless powder** is essentially gelatinized nitrocellulose and is manufactured in the form of flakes, strips, pellets, or perforated cylindrical grains. Smokeless powder is made in different shapes to obtain certain types of burning. The cylindrical grains are made in various diameters and lengths, grains vary in diameter from 0.032 inch for caliber 30

cartridges to 0.947 inch for 16-inch propelling charges, and varies in corresponding lengths from 0_085 inch to 2.170 inches. For small-size grains either no perforation or a single perforation is required. However, for larger grains, seven equally spaced perforations are present in order to have large burning surface area. The critical dimension is the web size, that is, the average thickness of the powder between the perforations. In color, the grains vary from light amber to a deep brown or black. Nitrocellulose smokeless propellants are used as the propellant for small-arms and larger-caliber ammunition. The perforated form of grain is the one most commonly used in United States military powders. Single perforated grains are used for small -arms, minor-caliber weapons, and certain howitzers. Powders with seven perforations are used for larger-caliber weapons.

Ordnance Technical Data Sheet

U.S. Rocket Warhead, 2.75 in, Practice, M274 (XM274)

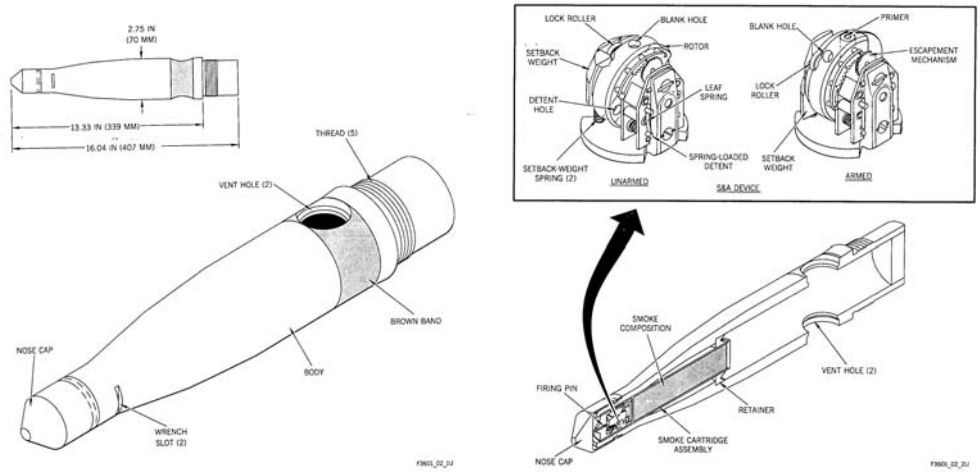

Nomenclature:	M274 & XM274, Practice 2.75 in, Warhead
Ordnance Family:	Rockets
DODIC:	Not Provided
Filler:	Photoflash Powder*
Filler weight:	43.00 g (1.5 oz)
Item weight:	4.22 kg (9.3 lbs)
Diameter:	70.00 mm (2.75 in)
Length:	407.00 mm (16.02 in)
Maximum Range:	Not Provided
Fuze:	Impact fired, Safe and Arming device(S&A)

Usage: The figure shows the appearance and dimensions of the M274 (formerly designated XM274) practice warhead. This is a practice warhead incorporating a smoke charge designed to produce a flash, bang, and smoke signature on warhead impact. The warhead incorporates a sustained-acceleration-armed, impact-fired, safety and arming (S&A) device to initiate the smoke charge. The warhead simulates the M151 high-explosive (HE) warhead.

Description: The warhead is painted blue and has a brown band. The designation is stenciled on the warhead in white.

Reference: ORDATA Online.

***Pyrotechnic** and screening devices contain combustible chemicals which, when ignited, rapidly generate a flame of intense heat, flash, infrared radiation, smoke or sound display (or combinations of these effects) for a variety of purposes. Compared to other

explosive substances, pyrotechnics are more adversely affected by moisture, temperature, and rough handling. Some compositions may become more sensitive, and even ignite, when exposed to moisture or air. Mixtures which contain chlorates and sulfur are susceptible to spontaneous combustion. Most pyrotechnics produce a very hot fire that is difficult to extinguish and most burn without serious explosions. Many chemicals used in pyrotechnics produce toxic effects when ignited. Other pyrotechnics, which contain propelling charges, create an extremely hazardous missile hazard if accidentally ignited.

Ordnance Technical Data Sheet

U.S. Fuze, Projectile, Base Detonating (BD), M38 & M38A1

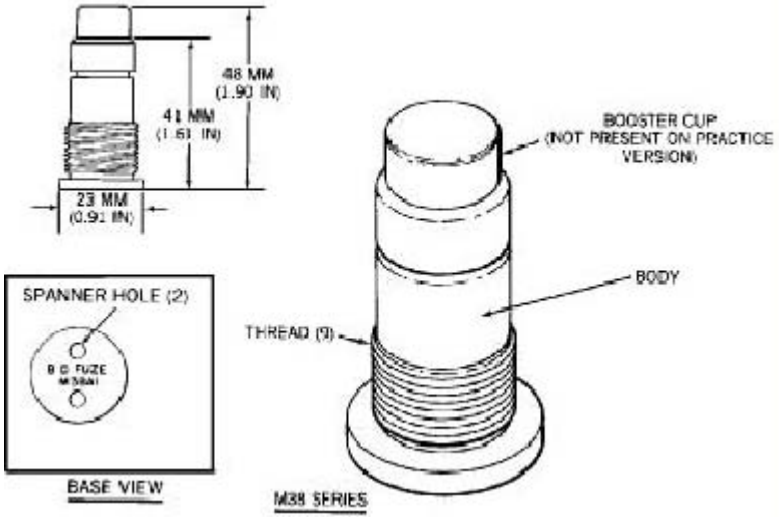

Nomenclature:	Projectile Fuze
Ordnance Family:	Fuze
DODIC:	Not Provided
Filler:	Tetryl*
Filler weight:	less than 2 grams
Item weight:	Not Available
Diameter:	23 mm (0.91 in)
Length:	48 mm (1.90 in)
Maximum Range:	Not Applicable
Fragmentation Distance:	533 feet
Fuze:	Various

Usage: These are setback-armed, impact-inertia-fired, non-delay, base-detonating fuzes. The fuzes are unpainted, and are marked on their bases with their nomenclatures. The bodies of the M38 series fuzes are brass.

Description: On projectile firing, setback drives the setback sleeve rearward. The setback sleeve forces the resistance ring rearward over the shoulder and into the groove around the base of the firing pin. The resistance ring locks the setback sleeve and firing pin together, with the tip of the firing pin protruding from the front of the sleeve. On projectile impact, inertia drives the firing pin and sleeve forward against the creep spring. The firing pin stabs the detonator, initiating the explosive train. The detonator and tetryl booster in the M38 series fuzes each contain less than 1 gram of explosive. The practice version of the M38A1 has no booster.

* Tetryl - 2, 4, 6-Trinitrophenylmethylnitramine, N-methyl-N, 2, 4, 6-Tetranitroaniline, Tetralite, TetryIite, Pyronite. Tetryl is used extensively as a booster and the main charge for small caliber projectiles. Also used as the base charge in compound detonators. Tetryl is a finely divided

crystalline powder that is colorless when freshly prepared and highly purified; rapidly acquires a yellow color when exposed to light, and turns gray when graphite is added as a lubricant during loading. Sensitivity is intermediate between TNT and PETN, more sensitive than picric acid and can be detonated easier than TNT or ammonium picrate. Tetryl should be considered as sensitive as mercury fulminate when finely divided and will usually detonate when subjected to bullet impact. Tetryl is slightly hygroscopic, but not adversely affected by moisture.

Reference: ORDATA Online

Ordnance Technical Data Sheet

U.S. CARTRIDGE, 40-MM, High Explosive (HE), M381, M386, M406 & M441

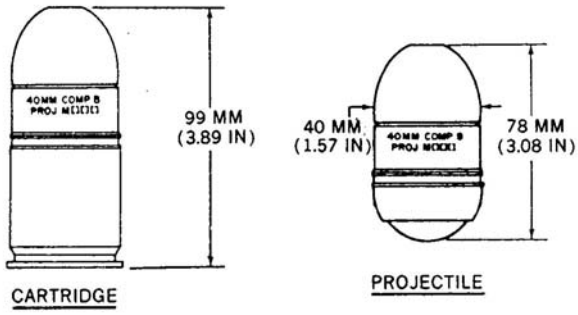

Nomenclature:	M381, M386, M406, M441, Cartridge, 40mm, HE
Ordnance Family:	Projectile
DODIC:	B574
Filler:	Composition B*
Filler weight:	32.00 g (1.13 oz)
Item weight:	227.00 g (8.07 oz)
Diameter:	40.00 mm (1.58 in)
Length:	77.00 mm (3.03 in)
Maximum Range:	400.00 m (437.40 yds)
Fuze:	Always acting

Usage: These are Army, high-explosive (HE), antipersonnel (APERS) ground –burst projectiles.

Description: The projectile body is chemically finished to obtain an olive-drab color. The ogive is anodized gold. Identification markings are yellow.

Reference: ORDATA Online.

* **Composition B.** Composition B (comp B) is a (59/40/1) mixture of RDX, TNT, and beeswax. Its color may vary from dirty white, light yellow to brownish yellow. It is less sensitive than tetryl but more sensitive than TNT. It is intermediate between TNT and RDX with respect to sensitivity and initiation. It is only inferior to tritonal and torpex with respect to blast effect. Composition B is an authorized filling for Army-Navy (AN) standard aircraft bombs, mines, torpedoes, antitank artillery shells (76- and 105-millimeter), demolition charges, and in rockets. Composition B containing 60 percent RDX and 40 percent TNT, exclusive of wax, is known as

composition B-2, a nonstandard explosive. Because of its greater sensitivity to impact, composition B-2 is not as suitable as composition B for use in bombs.

<u>Ordnance Technical Data Sheet</u>
.45 Caliber Small Arms, M3A1

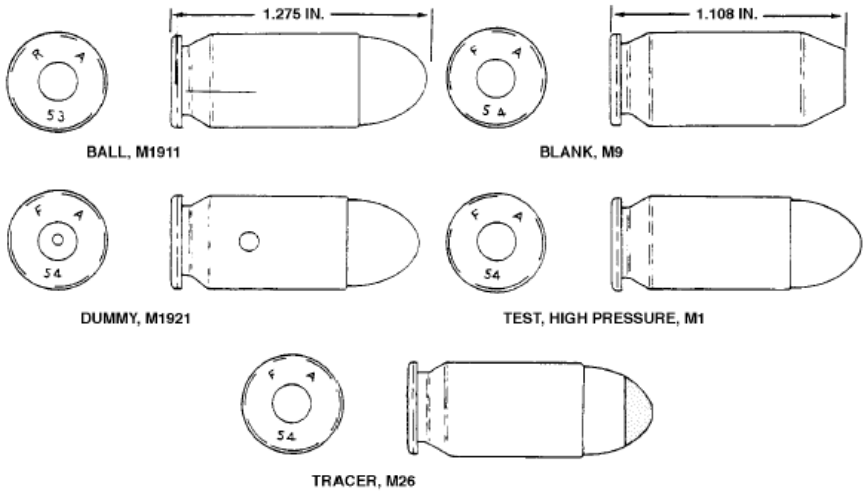

Nomenclature:	M3A1, Ball, .45 Cal,
Ordnance Family:	Small Arms
DODIC:	A475
Filler:	*Double Base Powder
Filler weight:	7.00 g (.247 oz)
Item weight:	331.00 g (11.32 oz)
Diameter:	11.43 mm **(**.45 in)
Length:	32.40 mm (1.28 in)
Maximum Range:	Not Provided
Fuze:	Percussion

Usage: Submachine Gun, Caliber .45, M3A1; and Pistol, Caliber .45, M1911A1. The cartridge is intended for use against personnel.

Description: BALL Cartridge. The cartridge is identified by the plain bullet tip.

* Double base propellants contain nitrocellulose and a liquid organic nitrate, such as nitroglycerine. As with single base, stabilizers and additives may be present. Double base propellants are used in cannon, small arms, mortars, rockets, and jet propulsion units.

Reference: TM 43-0001-27

Ordnance Technical Data Sheet

U.S. Grenade, Dual Purpose (DP), High Explosive (HE), M42, M46, M77

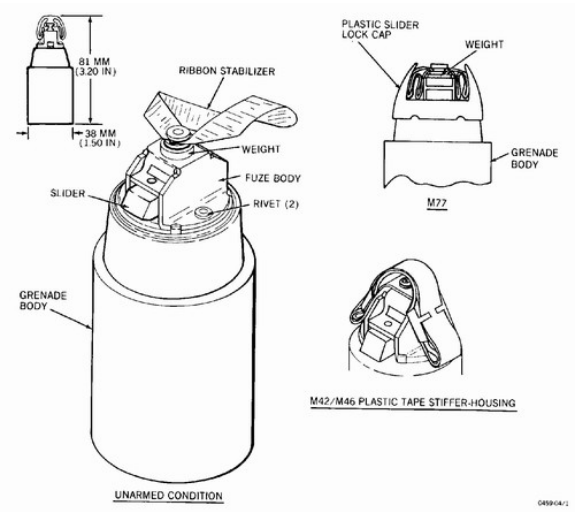

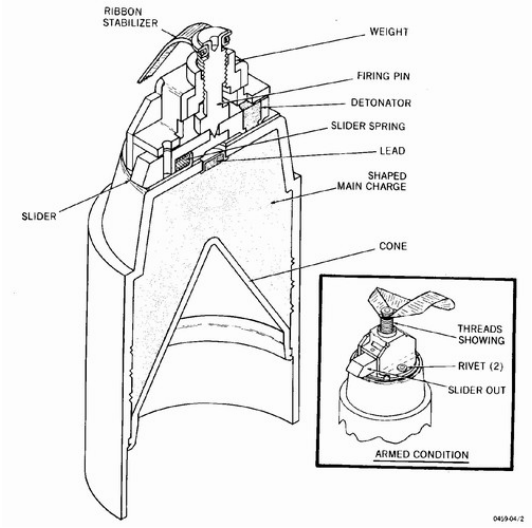

Nomenclature:	M42, M46, M77, DP, HE
Ordnance Family:	Submunitions
DODIC:	Not Provided
Filler:	Composition A-5*
Filler weight:	33.00 g (1.16 oz)
Item weight:	198.00 g (6.98 oz)
Diameter:	38.00 mm (1.5 in)
Length:	81.00 mm (3.19 in)
Maximum Range:	Not Provided
Fuze:	Impact-inertia

Usage: These are dual-purpose (DP), high-explosive (HE) grenades containing a shaped main charge, and incorporating an impact-inertia fuze. The grenade is stabilized, and the fuze is armed in flight, by a ribbon stabilizer. These grenades are armor-defeating, antipersonnel sub-munitions delivered by projectile or rocket warhead.

Description: The M42 and M77 grenades are dull gray. The M46 grenade is silver, reddish brown, or dull gold. There are no markings on these grenades.

Reference: ORDATA Online, MIDAS.

* **Composition A** is a wax-coated, granular explosive consisting of RDX and plasticizing wax. Composition A is used by the military in land mines and 2.75 and 5 inch rockets.

Comp A-3 explosives are made from RDX and wax. Composition A-3 is a wax-coated, granular explosive, consisting of 91% RDX and 9% desensitizing wax. Composition A-3 is not melted or cast. It is pressed into projectiles. It is non-hygroscopic and possesses satisfactory stowage properties. Composition A-3 is appreciably more brisant and powerful than TNT; its velocity of detonation is approximately 27,000 fps. It may be white or buff, depending upon the color of the wax used to coat the powdered RDX. Composition A-3 is used as a filler in projectiles that contain a small burster cavity, such as anti-aircraft projectiles. It can be used as compressed fillers for medium-caliber projectiles.

Ordnance Technical Data Sheet

U.S. Projectile Fuze, PD, M557 SQ

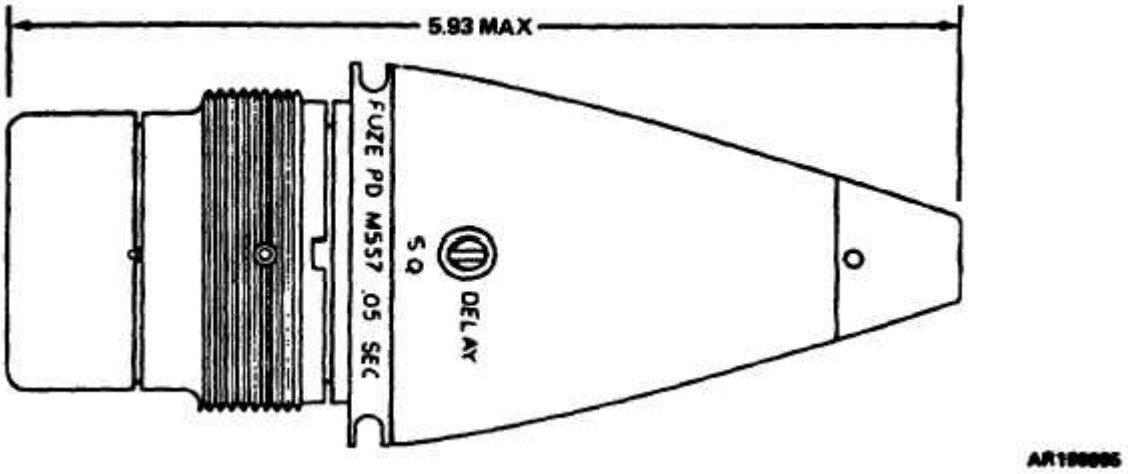

Nomenclature: Fuze, Point Detonating M557
Ordnance Family: Projectile
DODIC: N335
Filler: Black Powder *
Filler weight: Not Provided
Item Weight: .98 kg (2.15 lbs)
Diameter: 61.00 mm (2.4 in)
Length: 150.60 mm (5.93 in)
Maximum Range: Not Provided

Usage: Use: Point Detonating Fuze M557 is a selective superquick or 0.05 second delay impact fuze designed for use in ammunition for guns of 75mm through 155mm; 75mm and 105mm rifles; 75mm through 8-inch (203mm) howitzers and for 4.2-inch (107mm) mortars

Description: The M557 fuze consists of Fuze M48A3 assembled with the M125A1 booster. The point detonating head assembly contains a firing pin support which prevents initiation of Detonator M24 until impact. The body contains an M1 delay plunger assembly and an interrupter assembly with a setting sleeve which provides a means of setting or selecting superquick (PD) or delay functioning. The delay plunger assembly includes a firing pin and Delay Element M2. The delay element includes Primer M54, a black powder delay charge and Relay M7. The head assembly is attached to the body by means or the flash tube which also positions the fuze windshield or ogive. The ogive is a thin-walled steel stamping utilized to provide an aerodynamic shape to the fuze. The M125A1 booster consists of a brass booster body having external threads to fit projectiles having 2-inch (51mm diameter, 12 threads per inch and internal threads to receive fuzes having 1.7 inch (43mm) diameter, 14

threads per inch. An aluminum booster cup containing a (340 grain) (22g) tetryl booster pellet is threaded to the booster body. The M125A1 booster configuration is that of an eccentric rotor containing an M17 detonator held in an unarmed (out of line) position by centrifugal detents and a gear train mechanism which provides for delayed arming of the booster assembly for approximately 200 feet (60m) depending upon the weapon and charge being fired. Functioning: Upon firing, centrifugal force is utilized to arm the fuze. Centrifugal force retracts the detents holding the rotor in the unarmed position allowing it to turn 5-19 against the gear train mechanism which controls the turning speed of the rotor until the rotor is in the armed position. Once in the armed position, the rotor is locked in position by a spring loaded pin and the M17 detonator is aligned with the detonation train of the fuze. Simultaneously, centrifugal force will arm the delay plunger assembly and retract the flash tube interrupter unless the fuze is set delay. If the fuze is set delay, the flash tube interrupter will not retract and the flash from the superquick element will be prevented from initiating the explosive train of the booster. The fuze is initiated upon impact with the target the firing pin is driven into the M24 detonator which flashes through to the M17 detonator, activating the lead charge and booster pellet. If set delay, the flash tube is blocked and the M17 detonator is activated by the delay element. The delay mechanism of the booster provides an arming distance of approximately 200 feet (60m), depending upon the weapon employed

Reference: TM 43-0001-28-3 (Fuze).

***Black Powder:** Characteristics. Black powder, the oldest explosive known, is an intimate uniform mechanical mixture of finely pulverized potassium nitrate (or sodium nitrate), charcoal, and sulfur. Until the development of nitrocellulose propellants, black powder was the only propellant and explosive available. Potassium nitrate is used in most military black powders. It ignites spontaneously at about 300 degrees Celsius or 540 degrees Fahrenheit, and develops a fairly high temperature of combustion (2,300 degrees to 3,800 degrees Celsius or 4,172 degrees to 6,872 degrees Fahrenheit), which causes erosion in the bore of weapons. Black powder is usually in the form of small, black grains that are polished by glazing with graphite. It is hygroscopic and subject to rapid deterioration when exposed to moisture. If kept dry, it retains its explosive properties indefinitely. It is one of the most dangerous explosives to handle because of the ease with which it is ignited by heat, friction, or spark.

Ordnance Technical Data Sheet

U.S. Cartridge, 20 mm, High Explosive Incendiary (HEI), M56, M56A1, M56A2, M56A3, & M56A4

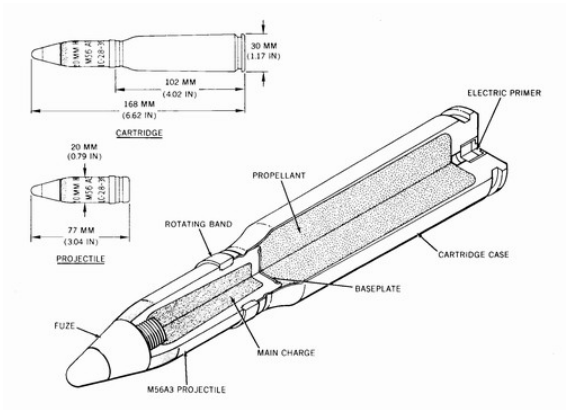

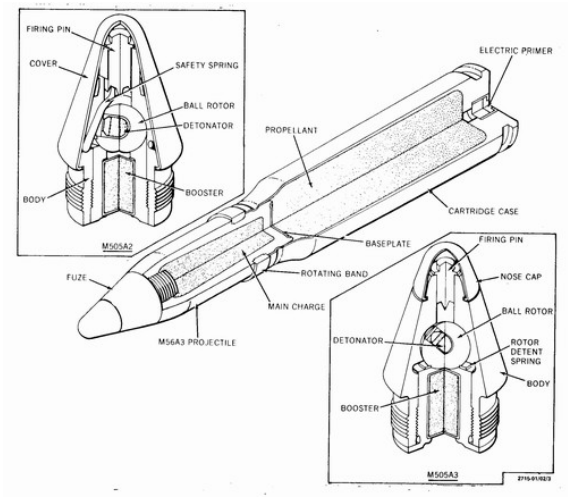

Nomenclature:	M56, Projectile, 20 mm HEI
Ordnance Family:	Projectile
DODIC:	A582
Filler:	RDX, Wax, Aluminum (A-1X-2)*
Propellant:	Double Base Propellant **
Filler weight:	9.00 g (.3675 oz)
Item weight:	102.06 g (3.619 oz)
Diameter:	20.00 mm (.7874 in)
Length:	77.00 mm (3.031 in)
Maximum Range:	Not Provided
Fuze:	PD (Point Detonating)

Usage: These are electrically primed cartridges with high-explosive-incendiary projectiles and centrifugally armed, point-detonating fuzes. They are used in the M39, M6l, and Ml68, and M195 automatic cannons.

Description: The cartridge case is unpainted but has nomenclature and loading information stenciled on it. Cartridges of current manufacture have projectiles painted yellow with a red band below the fuze. Projectiles of earlier manufacture were painted yellow overall, or red with an olive drab ogive. Nomenclature and loading information is stenciled in black on the projectile body and may be stamped in the rotating band. The fuze is unpainted and unmarked.

Reference: ORDATA Online, Midas.

* **RDX**, cyclotrimethylenetrinitramine, one of the most powerful explosives, is commonly known as cyclonite. It is a white crystalline solid having a melting point of

+397°F and is very stable. It has slightly more power and brisance than PETN. It is more easily initiated by mercury fulminate than is tetryl. RDX has been used mainly in mixtures with other explosives, but can be used by itself as a sub-booster, booster, and bursting charge. It is also combined with nitrohydrocarbons, which permit cast-loading, or with waxes or oils for press-loading. It has a high degree of stability in storage.

** **Double Base Propellant:** Double base propellants contain nitrocellulose and a liquid organic nitrate, such as nitroglycerine. As with single base, stabilizers and additives may be present. Double base propellants are used in cannon, small arms, mortars, rockets, and jet propulsion units.

Ordnance Technical Data Sheet

U.S. Cartridge, 7.62 mm, Small Arms, M59 or M80 w/Tracer M62

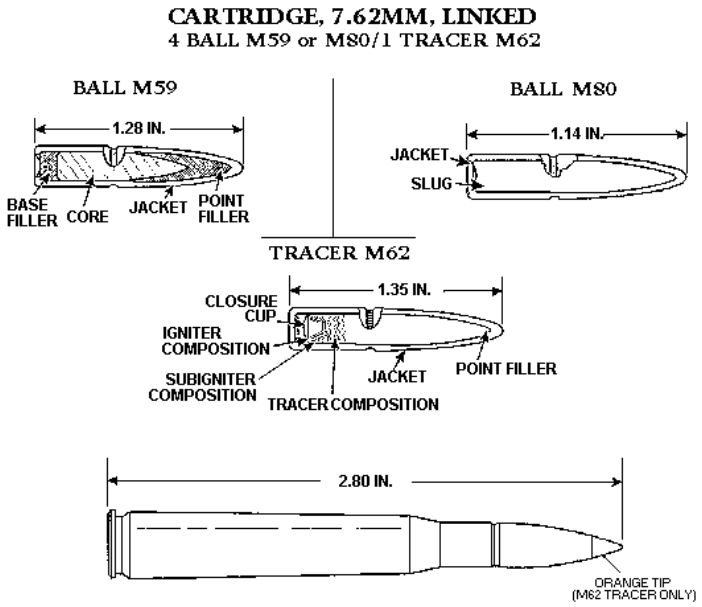

Nomenclature:	M59, M80 w/M62 tracer, 7.62 mm
Ordnance Family:	Small Arms
DODIC:	A138
Filler:	Single or Double Base Powder*
Filler weight:	Not Provided
Item weight:	376.5 g (13.2 oz)
Diameter:	7.62 mm (.3085 in)
Length:	71.12 mm (2.80in)
Maximum Range:	480.00 m (524.9 yds)

Usage: This cartridge is intended for use against personnel and unarmored targets.

Description: Full Metal Jacketed bullet and brass cartridge case, center fired Nato standard small arms.

Reference: ORDATA Online, MIDAS, TM 9-1306-200

* **Single Base Propellant:** Single base propellants contain nitro cellulose as their chief ingredient. Single-base compositions are used as low-pressure propellants, such as those used in small arms ammunition. They may contain a stabilizer, inorganic nitrates, nitro-compounds, metallic salts, metals, carbohydrates and dyes.

Double Base Propellant: Double base propellants contain nitrocellulose and a liquid organic nitrate, such as nitroglycerine. As with single base, stabilizers and additives may be present. Double base propellants are used in cannon, small arms, mortars, rockets, and jet propulsion units.

Ordnance Technical Data Sheet
U.S. Landmine Fuze, M603 and M604 Practice

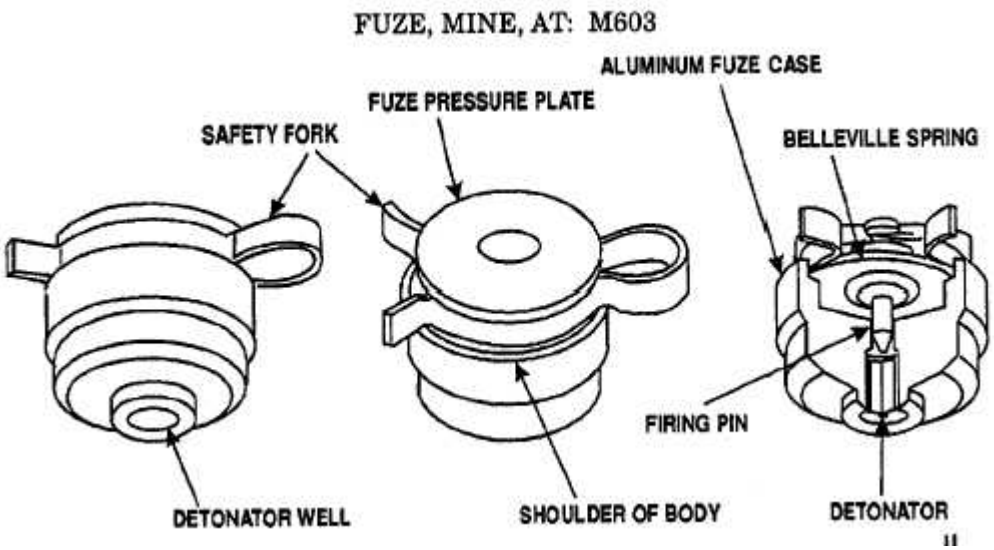

Nomenclature: U.S. Landmine Fuze, M603
Ordnance Family: Landmine
DODIC: Not Provided
Filler: Lead Azide/RDX
Filler weight: 275.00 mg (
Item Weight: 44.1 g (1.56 oz)
Diameter: 28.96 mm (1.14 in)
Length: 29.97 mm (1.18 in)
Maximum Range: Not Provided
Fuze: M603

Usage: M603 fuze is an instantaneous mechanical pressure-type fuze and is used with light antitank mine M7A2 and heavy antitank mine M15 and chemical agent mine M23

Description: The M603 fuze body contains a firing pin assembly, a cover assembly, a safety fork (clip), and a detonator. The firing pin is actuated by a Bellevue spring.

Reference: U.S. Army Technical Manual TM-43-0001-36.

Ordnance Technical Data Sheet

NATO Cartridge, 5.56 mm, Ball, M855

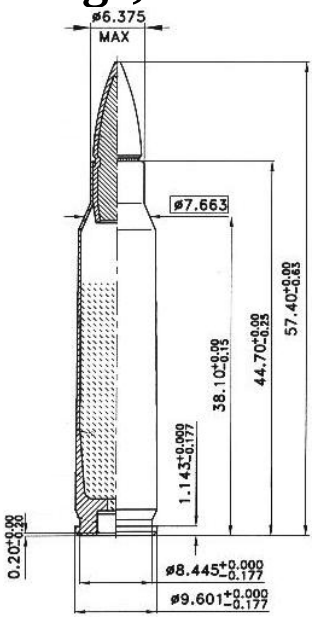

Nomenclature:	M855, NATO Cartridge, 5.56 mm, Ball
Ordnance Family:	Small Arms Ammunition
DODIC:	A075
Propellant:	Single or Double Base Powder*
Filler:	Lead alloy with steel penetrator and copper clad
Filler weight:	Not Provided
Item weight:	7.095 g (109.5 gr)
Diameter:	5.56 mm (.2189 in)
Length:	58.42 mm (2.3 in)
Maximum Range:	Not Provided

Usage: This is the NATO standard round. It is effective against personnel and light materials, not vehicles.

Description: The 5.56-mm ball M855 (A059) cartridge has a gilding, metal-jacketed, lead alloy core bullet with a steel penetrator. The primer and case are waterproof. It is identified by a green tip, has a projectile weight of 62 grains, and is 2.3 cm long. This is the NATO standard round. It is effective against personnel and light materials, not vehicles.

Reference: ORDATA Online, Army Technical Manuel TM 9-1306-200

***Single Base Propellant:** Single base propellants contain nitro cellulose as their chief ingredient. Single-base compositions are used as low-pressure propellants, such as those

used in small arms ammunition. They may contain a stabilizer, inorganic nitrates, nitro-compounds, metallic salts, metals, carbohydrates and dyes.

Double Base Propellant: Double base propellants contain nitrocellulose and a liquid organic nitrate, such as nitroglycerine. As with single base, stabilizers and additives may be present. Double base propellants are used in cannon, small arms, mortars, rockets, and jet propulsion units.

.

Ordnance Technical Data Sheet

U.S. Cartridge, 9 mm, Ball, M882

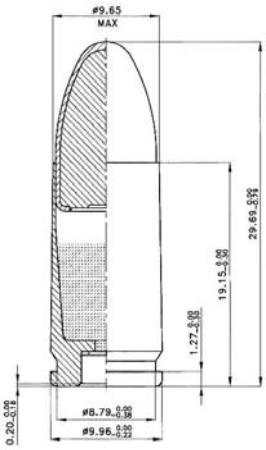

Nomenclature:	M882, Cartridge, 9 mm
Ordnance Family:	Small Arms
DODIC:	Not Provided
Filler:	Double Base Propellant*
Filler weight:	0.388 g (5.98 gr)
Item weight:	11.79 g (.42 oz)
Projectile Weight:	5.64 g (.20 oz)
Diameter:	9.00 mm (.35 in)
Length:	29.72 mm (1.17 in)

Usage: This cartridge is for firing in revolvers, pistols, and sub-machine guns chambered for the 9mm cartridge.

Description: The cartridge is 1.169 inches (2.96 centimeters) long, weighs approximately 182 grains (11.79 grams) and contains approximately 6 grains (.388 gram) of propellant composition.

Reference: Midas, U.S. Army TM 43-0001-27

* **Single Base Propellant:** Single base propellants contain nitro cellulose as their chief ingredient. Single-base compositions are used as low-pressure propellants, such as those used in small arms ammunition. They may contain a stabilizer, inorganic nitrates, nitro-compounds, metallic salts, metals, carbohydrates and dyes.

Double Base Propellant: Double base propellants contain nitrocellulose and a liquid organic nitrate, such as nitroglycerine. As with single base, stabilizers and additives may

be present. Double base propellants are used in cannon, small arms, mortars, rockets, and jet propulsion units

Ordnance Technical Data Sheet

U.S. Bomb Fuze, M904 Series

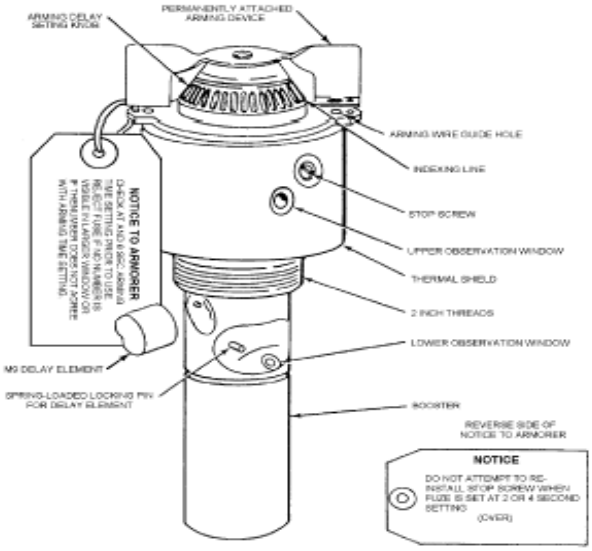

Nomenclature:	M904 Series, Bomb Fuze
Ordnance Family:	Bomb/Fuze
DODIC:	Not Provided
Filler:	Tetryl*
Filler weight:	42.52 g (1.5 oz)
Item Weight:	1.06 kg (2.33 lbs)
Diameter:	Not Provided
Length:	234.90 mm (9.25 in)
Maximum Range:	Not Provided

Usage: The M904 (series) fuze is a mechanical impact nose fuze used in the Mk 80 (series) low-drag general-purpose (LDGP) bombs. The M904 (series) fuze is installed in the nose fuze well of the bomb and requires the use of an adapter booster. The fuze is detonator-safe, and it contains two observation windows through which you can determine the safe/arm condition of the fuze.

Description: The M904 (series) fuze contains approximately 1 1/2 ounces of tetryl in the booster, which is located at the base of the fuze body. The entire fuze weighs about 2 1/3 pounds and is 9 1/4 inches long. The M904E4 is a thermally protected fuze. It is especially designed for use with the thermally protected Mk 80 (series) general-purpose bombs and the thermally protected M148E1 adapter booster. This significantly increases the cook-off time of the bombs subjected to intense heat or flame.

Reference: ORDATA Online.

***Tetryl** - 2, 4, 6-Trinitrophenylmethylnitramine, N-methyl-N, 2, 4, 6-Tetranitroaniline, Tetralite, TetryIite, Pyronite. Tetryl is used extensively as a booster and the main charge for small caliber projectiles. Also used as the base charge in compound detonators. Tetryl is a finely divided crystalline powder that is colorless when freshly prepared and highly purified; rapidly acquires a yellow color when exposed to light, and turns gray when graphite is added as a lubricant during loading. Sensitivity is intermediate between TNT and PETN, more sensitive than picric acid and can be detonated easier than TNT or ammonium picrate. Tetryl should be considered as sensitive as mercury fulminate when finely divided and will usually detonate when subjected to bullet impact. Tetryl is slightly hygroscopic, but not adversely affected by moisture.

M904E2/E3/E4 MECHANICAL IMPACT NOSE

FUZE

The M904 (series) fuze (fig. 1-1) is a mechanical impact nose fuze used in the Mk 80 (series) low-drag general-purpose (LDGP) bombs. The M904 (series) fuze is installed in the nose fuze well of the bomb and requires the use of an adapter booster. The fuze is detonator-safe, and it contains two observation windows through which you can determine the safe/arm condition of the fuze. There is no special locking feature designed into the fuze for shear safety if the bomb is accidentally dropped. However, detonation is unlikely if the collar (forward end of the fuze) is sheared off by the accidental drop before arming is complete. The fuze may be configured for a number of preselected arming and functioning delays needed by a mission. There are nine arming delays from 2 to 18 seconds in 2-second increments, and any combination of six functioning delays from instantaneous to 250 milliseconds (0.250 seconds) may be selected. An internal governor, driven by the permanently mounted arming vane, allows relatively constant arming times at release speeds ranging from 170 to over 525 knots. Functioning times are determined by the installation of an M9 delay element. Any one of six delay elements may be installed. Each delay element is identified by the functioning delay time stamped on the element body—NONDELAY (instantaneous), 0.01, 0.025, 0.05, 0.1, or 0.25 second.

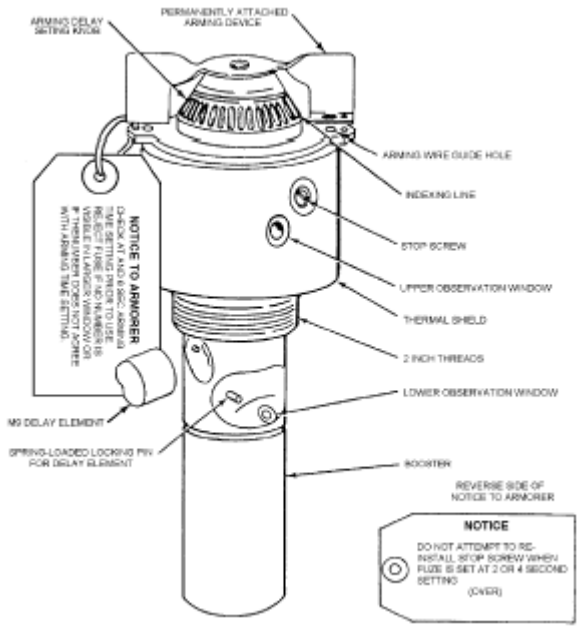

Physical Description

The M904 (series) fuze contains approximately 1 1/2 ounces of tetryl in the booster, which is located at the base of the fuze body. The entire fuze weighs about 2 1/3 pounds and is 9 1/4 inches long. The M904E4 is a thermally protected fuze. It is especially designed for use with the thermally protected Mk 80 (series) general-purpose bombs and

the thermally protected M148E1 adapter booster. This significantly increases the cook-off time (table 1-1) of the bombs subjected to intense heat or flame.

Item	Ordnance	Fuze/Adapter Booster	Average Reaction Time (Min & Sec)	Shortest Reaction Time	Bomb Initiated Reaction	Fuze Booster Initiated Reaction*
Bomb H6 and PBXN 109 filled	Mk 82, 83, 84 unprotected	All	3 + 30	2 + 30	Deflagration to explosion	Deflagration to detonation (after 5 minutes)
	Mk 82 Mods/ BLU-111	M904E4 with M148E1 Adapter, FMU-152, FMU-139	10 + 00	8 + 00	Deflagration	Deflagration to detonation (after 12 minutes)
		M904E2/E3 with M148/T45	6 + 00	5 + 00		Deflagration to detonation
		M148T45 (no fuze)	3 + 04			Deflagration to detonation (denotation may occur after 5 minutes)
	Mk 83 Mods/ BLU-110 thermally protected	M904E4 with M148E1 Adapter, FMU-139/B, FMU-152	10 + 00	8 + 49	Deflagration	Deflagration to detonation (after 12 minutes)
	Mk 84 Mods/ BLU-117 thermally protected	M904E4 with M148E1 Adapter, FMU-139/B, FMU-152	10 + 00	8 + 45	Deflagration to detonation (after 12 minutes)	

* Fuze or booster initiated reaction. Frequency of detonation reaction is small.

** Chips in exterior coating and/or groove for retarding fin cut to bare steel do not change cook-off time.

ARMING DELAY TIMES

Arming delay times are inscribed into the face of the forward nose retaining ring. A white indexing line is scribed on the knurled delay setting knob below the arming vane. The white indexing line must be matched to one of the indicated arming times to select the desired arming delay. To select the required arming delay time, depress the setting index locking pin and rotate the knurled arming delay setting knob until the white indexing line is aligned with the desired arming delay time stamped on the nose retaining ring. The 2- and 4-second arming times are for use with retarded weapons, and are only set by removing the stop screw located next to the setting index locking pin. **Never try to reinstall the stop screw when either of these two settings are used**. The stop screw may be reinstalled at any delay setting of 6 seconds or more.

IDENTIFICATION OF ARMED FUZES

There are three conditions of the M904 fuze—safe, partially armed, and fully armed. You can verify the fuze conditions by looking through the two observation windows in the fuze body (fig. 1-1). To check the fuze condition, hold the fuze vertically and look through the windows perpendicular to the fuze body. Look at table 1-2. It shows you what you would see through the observation windows of the M904E3/4 fuze at various time settings and fuze conditions. Also, check the M904E4 to make sure the thermal

sleeve is firmly bonded to the fuze collar and is not cracked. **NOTE**: If the safe condition of any fuze is in doubt, explosive ordnance disposal (EOD) personnel should be notified immediately.

Condition	Time Setting	Upper Window	Lower Window
Safe	18 Seconds	White number "18" on green background.	Vacant or dark in color.
	6 Seconds	White number "6" on green background.	
Partially Armed	18 and 6 Seconds	Green background with no numbers visible. (If numbers appear at other than "18" or "6" second setting or if numbers do not match settings, fuze is partially armed.)	Vacant or dark in color.
Armed	Any setting. (Time setting cannot be changed.)	*Red with black letter "A." (Some green may show at top of window.)	*Red with black Letter "A."

Functional Description

The M904 fuze arms and functions by the rotation of the arming vane and alignment of its internal components. When the fuze is released from the aircraft, the fuze arming wire is withdrawn from the fuze arming vane, and the arming vane is rotated by the airstream. Arming vane rotation is controlled by the constant arming action of the governor in the fuze. The arming vane continues to rotate until the preselected arming delay period (2 to 18 seconds) elapses (ends). Once the arming delay period elapses, the firing train is in full alignment and ready to function. t impact, the forward part of the fuze body drives the striker body and firing pin down into the M9 delay element. After the proper delay, the M9 delay ignites the relay, detonator, lead, and booster,which sets off the main charge.

Ordnance Technical Data Sheet

U.S. Projectile, 40 mm, High Explosive (HE), High Capacity (HC), MK 11

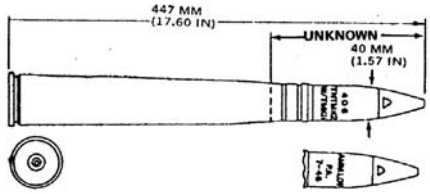

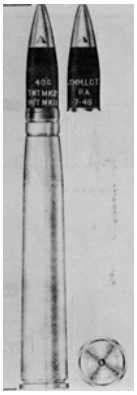

Nomenclature:	MK 11, Projectile, 40 mm, HE, HC
Ordnance Family:	Projectile
DODIC:	Not Provided
Filler:	TNT *
Filler weight:	36.29 g (1.28 oz)
Item weight:	Unknown
Diameter:	40.00 mm (1.58 in)
Length:	447.04 mm (17.6 in)
Maximum Range:	Not Provided
Fuze:	Not Provided

Usage: These are general purpose projectiles used for blast and fragmentation effect against personnel, unarmored material targets, and aircraft.

Description: Projectile is painted black with markings in white.

Reference: ORDATA Online.

* **TNT** (2, 4, 6-trinitrotolucne) TNT is relatively insensitive to shock or friction and can be stored indefinitely. In a refined form, it is one of the most stable high explosives. In the pure state, it is crystalline and nearly white, resembling a light brown sugar. When unconfined and ignited by a flame, it burns slowly and does not explode. It does however; emit a heavy, oily, black smoke. The burning or rapid heating of large quantities in a closed vessel may cause a violent detonation.

Ordnance Technical Data Sheet

U.S. Projectile, 5 in, Smoke, White Phosphorus (WP), MK 18 MOD 3

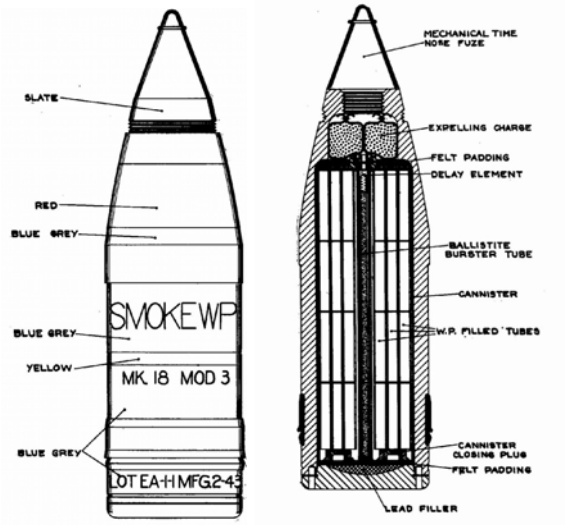

Nomenclature:	MK 18 MOD 3, Projectile, 5-in, Smoke, Plasticized White Phosphorus (PWP)
Ordnance Family:	Projectiles
DODIC:	Not Provided
Filler:	White Phosphorous, Plasticized *
Filler weight:	3.22 mm (7.1 lbs)
Item Weight:	24.04 kg (53 lbs)
Diameter:	126.24 mm (5 in)
Length:	508.00 mm (20 in)
Maximum Range:	Not Provided
Fuze:	Mission Dependent

Usage: This is a spin stabilized, smoke projectile containing P.W.P.

Description: The projectile is specially painted and marked to indicate its contents, as follows: The nose fuze is unpainted; just aft of the nose fuze is located a 2.5" band of slate gray, followed by a 2.5" red band; the bourrelet is unpainted; a 0.5" yellow band is painted 2 7/8" below the bourrelet; the rotating band is unpainted; the remainder of the body is blue gray overall. Lettering on the body is stenciled with yellow spraying lacquer. Other data is stamped on the base of the projectile.

Reference: ORDATA Online.

* **Plasticized white phosphorus (PWP)** is a finely divided form of WP* suspended in a thickened and gelled xylene rubber mixture. Like WP, it is an effective double purpose

screening and incendiary agent that can be dispersed under arctic, tropic, and temperate climatic conditions.

****White phosphorus (WP) -** is a white to light yellow, wax like, and luminous substance (phosphorescent in the dark). On ignition it produces a yellow-white flame and dense white smoke. WP is poisonous when taken internally. Its smoke or fumes are not. When dispersed by ammunition, as small particles, it ignites spontaneously on exposure to air and continues to burn on contact with solid materials, even when embedded in human flesh. WP smoke is unpleasant to breath but harmless; the particles, however, will poison food and water. It is used in bursting-type projectiles, artillery and mortar shell, grenades, rockets, and bombs. It is used as an igniter in incendiary ammunition that contains flammable fuels. WP, when used in projectiles and burst on terrain covered with soft deep snow, is smothered and produces approximately 75 percent less smoke.

Ordnance Technical Data Sheet

U.S. Projectile, 37 mm, High Explosive (HE), MK2(II)

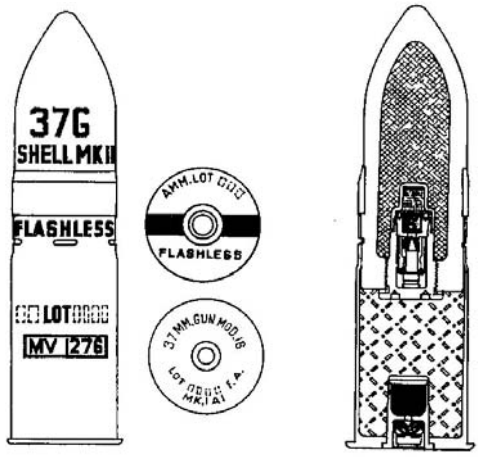

Nomenclature:	MK 2(II), Projectile, 37 mm, HE
Ordnance Family:	Projectile
DODIC:	Not Provided
Filler:	TNT*
Filler weight:	27.22 g (.96 oz)
Item weight:	Not Provided
Diameter:	37.00 mm (1.45 in)
Length:	113.03 mm (4.45 in)
Maximum Range:	Not Provided
Fuze:	Not Provided

Usage: This is a spin stabilized, high explosive projectile.

Description: The projectile is painted olive drab and is stenciled in yellow. (This painting and stenciling is common to ammunition loaded with high explosives).

Reference: ORDATA Online.

*** Tetryl** - 2, 4, 6-Trinitrophenylmethylnitramine, N-methyl-N, 2, 4, 6-Tetranitroaniline, Tetralite, TetryIite, Pyronite. Tetryl is used extensively as a booster and the main charge for small caliber projectiles. Also used as the base charge in compound detonators. Tetryl is a finely divided crystalline powder that is colorless when freshly prepared and highly purified; rapidly acquires a yellow color when exposed to light, and turns gray when graphite is added as a lubricant during loading. Sensitivity is intermediate between TNT and PETN, more sensitive than picric acid and can be detonated easier than TNT or ammonium picrate. Tetryl should be considered as sensitive as mercury fulminate when

finely divided and will usually detonate when subjected to bullet impact. Tetryl is slightly hygroscopic, but not adversely affected by moisture.

Ordnance Technical Data Sheet

U.S. Projectile, 20 MM HEI-T, MK210

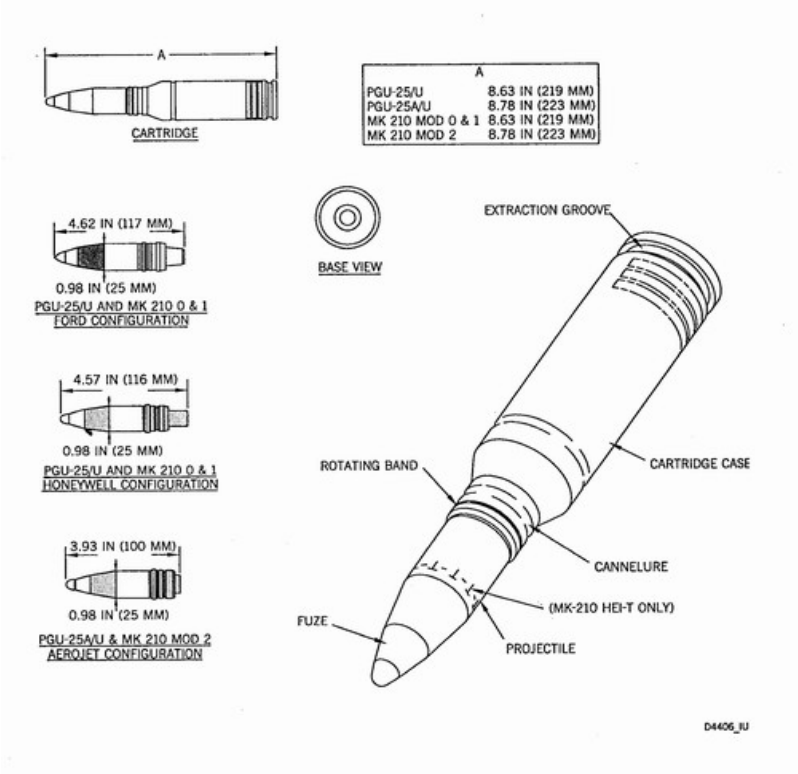

Nomenclature:	MK 210 Mods 0, 1 & 2, Projectile, 20 mm HEI-T
Ordnance Family:	Projectile
DODIC:	A775
Filler:	PBXN-5* and Zirconium Pellets**
Filler weight:	31.9 g (1.125 oz)
Item weight:	185.9 g (6.557 oz)
Diameter:	25.00 mm (.9843 in)
Length:	100.00 mm (3.937 in)
Maximum Range:	2000.00 m (6560 ft)
Fuze:	M505A3 (Point Detonating Super Quick)

Usage: The PGU-25/U and PGU-25A/U are percussion-primed, fixed-ammunition cartridges incorporating a high-explosive-incendiary projectile. The Mk 210 Mod 2 is a percussion-primed, fixed-ammunition cartridges incorporating a high-explosive-incendiary-with-tracer projectile. The projectile use an M505A3 centrifugally armed, point-detonating superquick fuze.

Description: The cartridge cases are unpainted. The PGU-28/B projectile has an unpainted nose-plug and a yellow-painted body with red and black bands.

Reference: ORDATA Online, Midas.

*** PBXN-5** is referred to as a plastic-bonded explosive because it is an explosive coated with plastic material. The composition is made of 95% HMX and 5% fluoroelastomers.

**** Zirconium** is a flammable metal and is not found as a metallic ore in nature.

Ordnance Technical Data Sheet

U.S. Projectile, 5 in, Mk 25 Mods 1-6

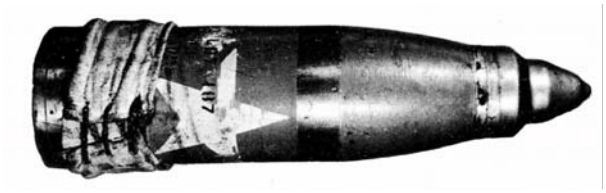

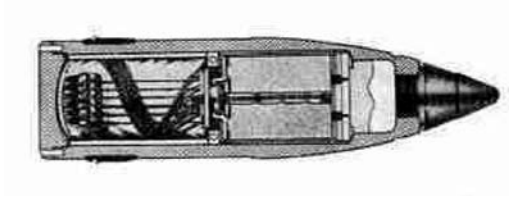

Nomenclature:	MK 25 MODS 1-6, 5 in, Illuminating,
Ordnance Family:	Projectiles
DODIC:	Not Provided
Filler:	Black Powder*
Filler weight:	0.07088 kg (0.16 lbs)
Item weight:	17.94 kg (39.55 lbs)
Diameter:	126.75 mm (4.99 in)
Length:	787.40 mm (31 in)
Maximum Range:	Not provided
Fuze:	Mission dependent

Usage: The Mod 2 projectile, used in the 5"/25 gun, is identical to the Mod 1, except for modification of the rotating band. When these projectiles are used in the 5"/51 bag gun, the Primer Mk 15 Mod 1 is used, and the Nose Fuzes Mk 50 and Mk 63 may be employed. Use of the Nose Fuzes Mk 50 and Mk 63 were not authorized with rounds used in the 5"/25 and 5"/51 case guns. The Illuminating Contents Mk 3 are used with projectiles Mods 1 through 4: projectiles Mods 5 and 6 are assembled with Illuminating Contents Mk 4 Mod 5 when used in the 5"/51 bag gun. Illuminating Contents Mk 3 when used in the 51"/51 case guns.

Description: The illuminating projectile is a thin case with a very small expelling charge just behind the fuze and an interior assembly of a star or candle with a parachute and a very lightly held base plug. Explosion of the expelling charge forces out the base and the interior assembly. The overall color of these projectiles is light blue with two white stars. The projectile is made of sheet metal.

Reference: ORDATA II

***Black Powder:** Characteristics. Black powder, the oldest explosive known, is an intimate uniform mechanical mixture of finely pulverized potassium nitrate (or sodium nitrate), charcoal, and sulfur. Until the development of nitrocellulose propellants, black powder was the only propellant and explosive available. Potassium nitrate is used in most military black powders. It ignites spontaneously at about 300 degrees Celsius or 540 degrees Fahrenheit, and develops a fairly high temperature of combustion (2,300 degrees to 3,800 degrees Celsius or 4,172 degrees to 6,872 degrees Fahrenheit), which causes erosion in the bore of weapons. Black powder is usually in the form of small, black grains that are polished by glazing with graphite. It is hygroscopic and

subject to rapid deterioration when exposed to moisture. If kept dry, it retains its explosive properties indefinitely. It is one of the most dangerous explosives to handle because of the ease with which it is ignited by heat, friction, or spark.

Ordnance Technical Data Sheet
U.S. Projectile, 5 in, Illuminating (Illum) Mk 27 Mods 1-10

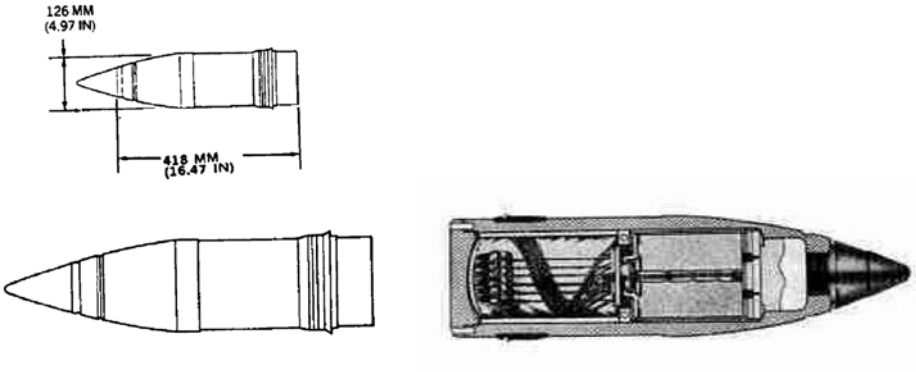

Nomenclature:	MK 27 MODS 1-10, 5 in, Illum
Ordnance Family:	Projectiles
DODIC:	Not Provided
Filler:	Illuminant Composition*
Filler weight:	0.00992 kg (0.022 lbs)
Item weight:	24.34 kg (53.66 lbs)
Diameter:	126.00 mm (4.96 in)
Length:	418.00 mm (16.47 in)
Maximum Range:	Not provided
Fuze:	Not Provided

Usage: These projectiles are for illuminating targets by a parachute flare.

Description: Light blue with two white stars. The illuminating projectile is a thin case with a very small expelling charge just behind the fuze and an interior assembly of a star or candle with a parachute and a very lightly held base plug. Explosion of the expelling charge forces out the base and the interior assembly. The projectile is made of thin metal.

Reference: ORDATA II.

***Illumination** - Fillers that when ignited produce a bright light. Illumination rounds are used to provide light for night missions and are found in many different configurations. The most common ordnance that has illumination fillers includes mortars, projectiles and projectiles. Illumination projectiles usually have a time fuze, which ignites the filler at a pre-determined time after it has been deployed and a parachute, which slows the projectiles decent thus providing longer illumination. On a range it is common to find projectile bodies that are left over from a successful illumination function as well as ordnance where for some reason or another, the illumination filler did not burn. Although

UXO with illumination fillers as less hazardous than high explosives rounds they can still be extremely dangerous and should be dealt with accordingly.

Ordnance Technical Data Sheet

U.S. Projectile, 5 in, High Explosive (HE), Anti-Aircraft (AA), Mk 28 Mod 9

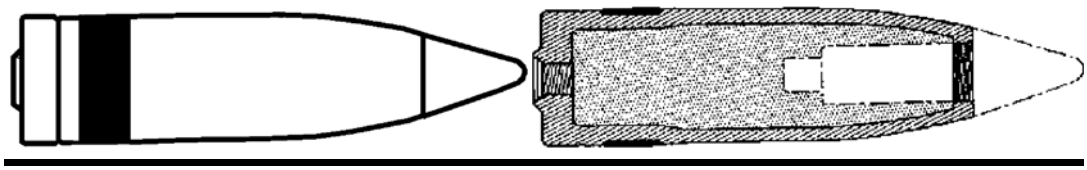

Nomenclature:	MK 28 MOD 9, HE, AA, 5 in
Ordnance Family:	Projectiles
DODIC:	Not Provided
Filler:	Explosive D*
Filler weight:	3.32 kg (7.32 lbs)
Item weight:	25.03 kg (55.18lbs)
Diameter:	126.75 mm (5 in)
Length:	525.78 mm (20.7 in)
Maximum Range:	Not provided
Fuze:	Mk 40-series fuze (VT)

Usage: These projectiles are similar in construction to High Capacity (HC) projectiles, except that a nose time or V.T. fuze is always assembled. It can be used for antiaircraft fire or, with the time fuze set on safe, used for bombardment. This projectile is fuzed with V.T. fuzes only. The projectile adapter is removed, and a gas-checked plug is inserted. No tracer or base fuze is used with this projectile. Fuze Mk 40 and Mods is currently replacing the Mk 32 and Mods in all assemblies.

Description: The overall projectile color is green. The projectile body is made of steel.

Reference: ORDATA II

***Explosive D -** Ammonium picrate is the least sensitive to shock and friction of all military explosives. This makes it well suited for use as a bursting charge in armor-piercing projectiles. It is slightly inferior in explosive strength to TNT. When heated, it does not melt but decomposes and explodes. It reacts slowly with metals, and when wet it may form sensitive and dangerous compounds with iron, copper, and lead. It is difficult to detonate. When ignited in the open it will burn readily like tar or resin. Although less sensitive than TNT, it can be exploded by severe shock or friction, is highly flammable, and may detonate when heated to a high temperature. It has a color of yellow, yellow-orange, or red.

Ordnance Technical Data Sheet

U.S. Projectile, 40 mm, Anti-Aircraft (AA), High Explosive-Plasticized (HE-P), MK 3

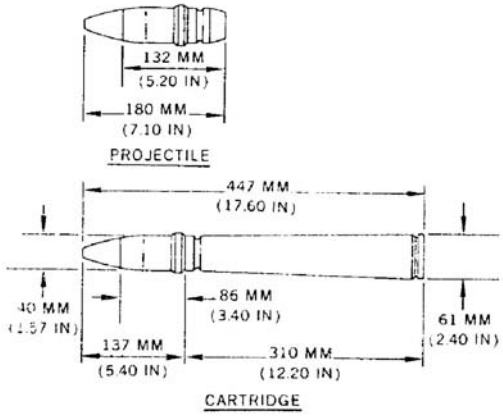

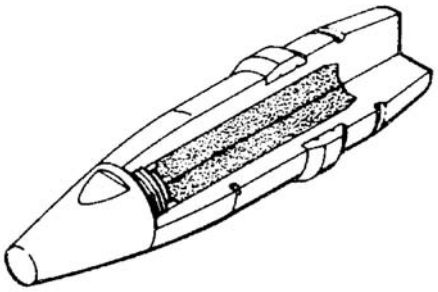

Nomenclature:	MK 3, Projectile, 40 mm, AA, HE-P
Ordnance Family:	Projectile
DODIC:	Not Provided
Filler:	TNT*
Filler weight:	88.00 g (3.1 oz)
Item weight:	Not Provided
Diameter:	40.00 mm (1.58 in)
Length:	180.00 mm (7.1 in)
Maximum Range:	Not Provided
Fuze:	Not Provided

Usage: These are spin stabilized, gun fired Anti-aircraft projectiles.

Description: The HE-P type contains the ALN prefix UA stenciled in black. If of early manufacture, the projectile and fuze or nose plug is green. If of recent manufacture, the projectile is yellow with black body stenciling.

Reference: ORDATA Online.

* **TNT** (2, 4, 6-trinitrotolucne) TNT is relatively insensitive to shock or friction and can be stored indefinitely. In a refined form, it is one of the most stable high explosives. In the pure state, it is crystalline and nearly white, resembling a light brown sugar. When unconfined and ignited by a flame, it burns slowly and does not explode. It does however; emit a heavy, oily, black smoke. The burning or rapid heating of large quantities in a closed vessel may cause a violent detonation.

Ordnance Technical Data Sheet

U.S. Projectile, 5 in, Anti-Aircraft (AA), Common, MK 31 MODS 1-11

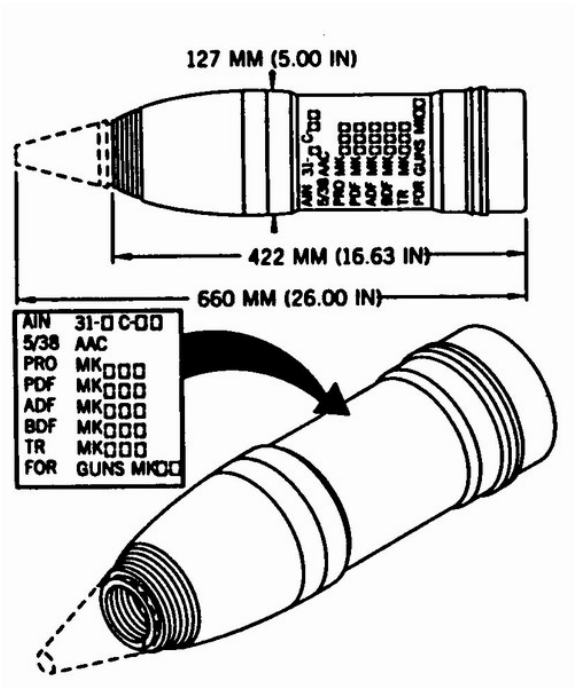

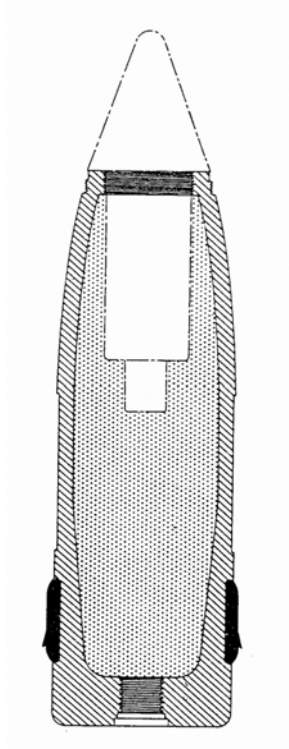

Nomenclature:	MK 31 Mods 1 – 11, Projectile, AA, Common
Ordnance Family:	Projectile
DODIC:	Not Provided
Filler:	Explosive D*
Filler weight:	3.29 kg (7.17 lbs)
Item weight:	25.00 kg (55.12 lbs)
Diameter:	126.75 mm (5 in)
Length:	422.00 mm (16.63 in)
Maximum Range:	Not Provided
Fuze:	Variable Time (V.T.)

Usage: This is a spin stabilized Anti-aircraft projectile. This projectile is for use against aircraft. These projectiles are similar in construction to high capacity projectiles, except that a nose time or variable time fuze is always assembled. It can be used for antiaircraft fire or, with the time fuze set on safe, used for bombardment

Description: The projectile is painted green.

Reference: ORDATA Online.

* **Explosive D** or also known as Ammonium Picrate is the least sensitive to shock and friction of all military explosives. Although less sensitive that TNT, it can be exploded by sever shock or friction. This makes it well suited for use as a bursting charge in armor-piercing projectiles, employed as the standard main charge for all Navy projectiles over 3 inch caliber. A product of picric acid, it is slightly inferior in explosive strength to TNT. When heated, it does not melt but decomposes and explodes. It reacts slowly with metals; however, when wet, it may form sensitive and dangerous compounds with iron, copper and lead. It is difficult to detonate. When ignited in the open, it will burn readily like tar or resin.

Ordnance Technical Data Sheet

U.S. Projectile, 5 in, High Explosive (HE), Mk 32 Mods 1-4

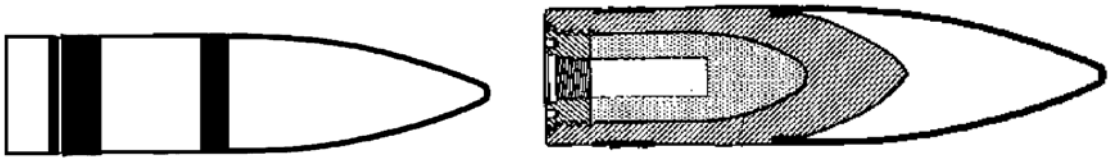

Nomenclature:	MK 32 MODS 1-4, HE, 5 in, Common
Ordnance Family:	Projectiles
DODIC:	Not Provided
Filler:	Explosive D*
Filler weight:	1.66 kg (1.70 lbs)
Item weight:	24.49kg (53.99 lbs)
Diameter:	127 mm (5.00 in)
Length:	471.17 mm (18.55 in)
Maximum Range:	Not provided
Fuze:	Base Detonating (PD)

Usage: These projectiles are designed to penetrate approximately one-third their caliber of armor. They differ from Armor-Piercing and Special Common projectiles in that they have no cap or hood; the windshield threads directly to the body

Description: The projectile body is slate gray. The projectile is made of steel.

Reference: ORDATA II.

***Explosive D -** Ammonium picrate is the least sensitive to shock and friction of all military explosives. This makes it well suited for use as a bursting charge in armor-piercing projectiles. It is slightly inferior in explosive strength to TNT. When heated, it does not melt but decomposes and explodes. It reacts slowly with metals, and when wet it may form sensitive and dangerous compounds with iron, copper, and lead. It is difficult to detonate. When ignited in the open it will burn readily like tar or resin. Although less sensitive than TNT, it can be exploded by severe shock or friction, is highly flammable, and may detonate when heated to a high temperature. It has a color of yellow, yellow-orange, or red.

Ordnance Technical Data Sheet

U.S. Projectile, 5 in, High Explosive (HE), Mk 34 Mod 10

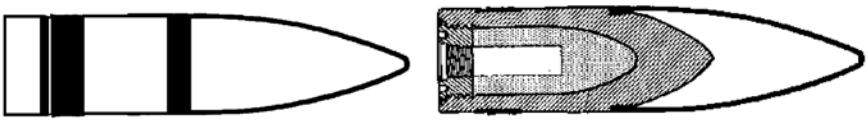

Nomenclature:	MK 34 MOD 10, HE, 5 in, Common
Ordnance Family:	Projectiles
DODIC:	Not Provided
Filler:	Composition A*
Filler weight:	3.29 kg (7.25 lbs)
Item weight:	25.03 kg (55.18 lbs)
Diameter:	126.75 mm (4.99 in)
Length:	525.78 mm (20.7 in)
Maximum Range:	Not provided
Fuze:	Base detonating

Usage: These projectiles are designed to penetrate approximately one-third their caliber of armor. They differ from Armor-Piercing and Special Common projectiles in that they have no cap or hood; the windshield threads directly to the body. Fuzing is base detonating.

Description: The overall color is slate gray. The projectile is made of steel.

Reference: ORDATA II.

* **Composition A -** is a wax-coated, granular explosive consisting of RDX and plasticizing wax. Composition A is used by the military in land mines and 2.75 and 5 inch rockets. Comp A-3 explosives are made from RDX and wax. Composition A-3 is a wax-coated, granular explosive, consisting of 91% RDX and 9% desensitizing wax. Composition A-3 is not melted or cast. It is pressed into projectiles. It is non-hygroscopic and possesses satisfactory stowage properties. Composition A-3 is appreciably more brisant and powerful than TNT; its velocity of detonation is approximately 27,000 fps. It may be white or buff, depending upon the color of the wax used to coat the powdered RDX. Composition A-3 is used as a filler in projectiles that contain a small burster cavity, such as anti-aircraft projectiles. It can be used as compressed fillers for medium-caliber projectiles.

Ordnance Technical Data Sheet

U.S. Rocket Motor, 2.75 in, Slow Spin Wraparound Fin Aircraft Rocket (SSWAFAR), MK 66 MOD 1, 2, 3, and 4

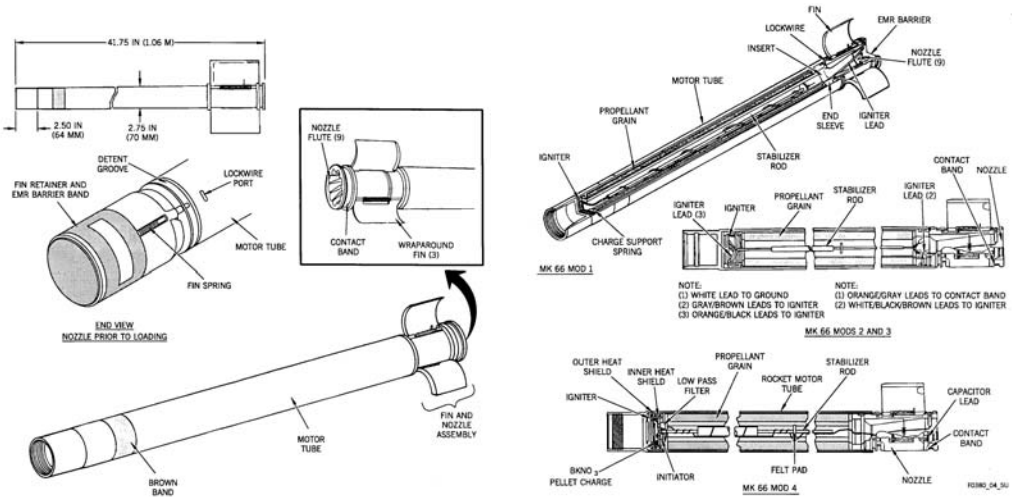

Nomenclature:	MK 66 MODs 1,2,3 & 4, 2.75 in Rocket Motor, SSWAFAR
Ordnance Family:	Rocket
DODIC:	Not Provided
Filler:	Ballistite*
Filler weight:	3.27 kg (7.21 lbs)
Item weight:	6.21 kg (13.69 lbs)
Diameter:	70.00 mm (2.75 in)
Length:	1.06 m (41.73 in)
Maximum Range:	Not Provided
Fuze:	Mission/Warhead Dependent

Usage: The figure shows the appearance and dimensions of the Mk 66 Mods 1, 2, 3, and 4 rocket motors. The Mk 66 Mod 0 was developed, but never issued for service use. The Mk 66 Mod 0 rocket motor has a 15-flute nozzle; the Mods 1, 2, 3, and 4 have a 9-flute nozzle. The Mk 66 Mods 2, 3, and 4 rocket motors differ from the Mod 1 motor, in that the Mods 2, 3, and 4 contain a Hazards of Electromagnetic Radiation to Ordnance (HERO) Safe filter. The Mk 66 Mods 3 and 4 also contain a radio frequency (RF) filter in the firing circuit to resist inadvertent firing by stray RF currents. The Mk 66 Mods 1, 2, 3, and 4 are slow-spin, wraparound-fin aircraft rockets (SSWAFAR). The Mk 66 Mods 1, 2, 3, and 4 are electrically initiated, spin and fin-stabilized, solid-propellant rocket motors. The Mk 66 Mods 1 through 4 rocket motor weigh 13.70 pounds (6.21 kilograms) before firing, and approximately 7 pounds (3 kilograms) after firing.

Description: The motor tubes are painted white and have a brown band around the forward end.

Reference: ORDATA Online.

* Ballistite – Double Base Propellant** i.e., two explosive substances, nitrocellulose and nitroglycerin, blended together with diphenylamine, which acts as a stabilizer.

**** Double Base Propellant:** Double base propellants contain nitrocellulose and a liquid organic nitrate, such as nitroglycerine. As with single base, stabilizers and additives may be present. Double base propellants are used in cannon, small arms, mortars, rockets, and jet propulsion units.

Ordnance Technical Data Sheet

U.S. Rocket Motor, 2.75 in, SSWAFAR, MK 66 MOD 1, 2, 3, and 4

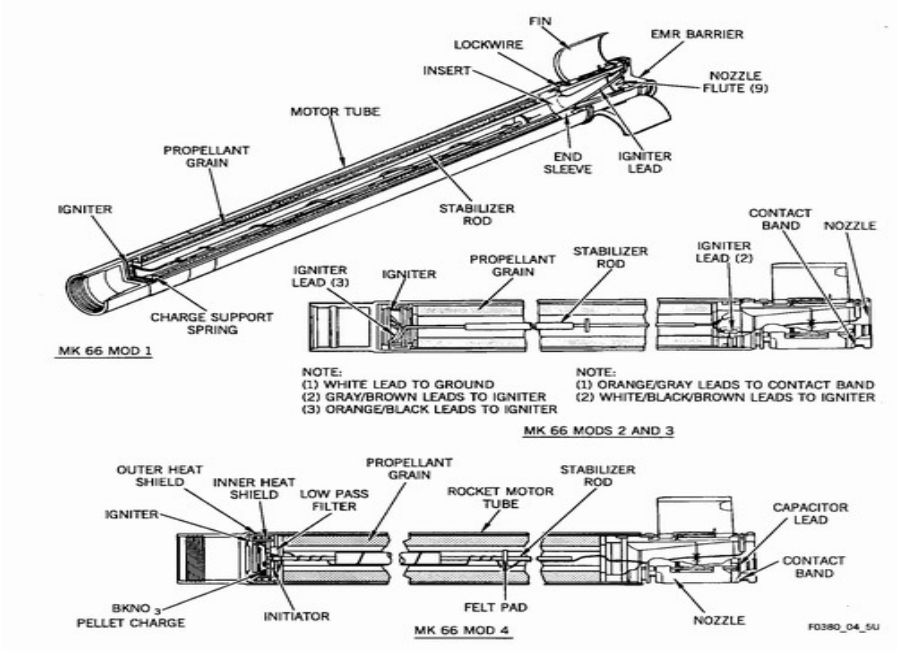

Nomenclature:	Rocket Motor MK 66 Mod 1, 2, 3, & 4
Ordnance Family:	Rocket
DODIC:	Not Provided
Filler:	Propellant, Rocket, Double-Base
Filler weight:	3.27 kg (7.209 lbs)
Item weight:	6.21 kg (13.69 lbs)
Propellant:	Double Base Propellant*
Diameter:	70.00 mm (2.75 in)
Length:	1.06 m (3.48 ft)
Maximum Range:	Not provided
Fuze:	Warhead/Mission dependent

Usage: Standard Air to Ground rocket motor. The figure shows the appearance and dimensions of the Mk 66 Mods 1, 2, 3, and 4 rocket motors. The Mk 66 Mod 0 was developed, but never issued for service use.

Description: The motor tubes are painted white and have a brown band around the forward end. Mk 66 Mod 0 rocket motor has a 15-flute nozzle; the Mods 1, 2, 3, and 4 have a 9-flute nozzle. The Mk 66 Mods 2, 3, and 4 rocket motors differ from the Mod 1 motor, in that the Mods 2, 3, and 4 contain a Hazards of Electromagnetic Radiation to Ordnance (HERO) Safe filter. The Mk 66 Mods 3 and 4 also contain a radio frequency (RF) filter in the firing circuit to resist inadvertent firing by stray RF currents. The Mk 66

Mods 1, 2, 3, and 4 are slow-spin, wraparound-fin aircraft rockets (SSWAFAR). The Mk 66 Mods 1, 2, 3, and 4 are electrically initiated, spin and fin-stabilized, solid-propellant rocket motors. The Mk 66 Mods 1 through 4 rocket motor weigh 13.70 pounds (6.21 kilograms) before firing, and approximately 7 pounds (3 kilograms) after firing

Reference: ORDATA Online.

*** Double Base Propellant:** Double base propellants contain nitrocellulose and a liquid organic nitrate, such as nitroglycerine. As with single base, stabilizers and additives may be present. Double base propellants are used in cannon, small arms, mortars, rockets, and jet propulsion units.

Ordnance Technical Data Sheet

U.S. Warhead, Rocket, 2.75 in, Smoke, MK 67 MOD 0

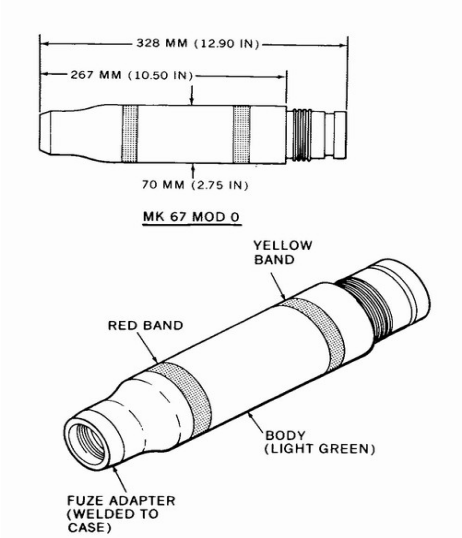

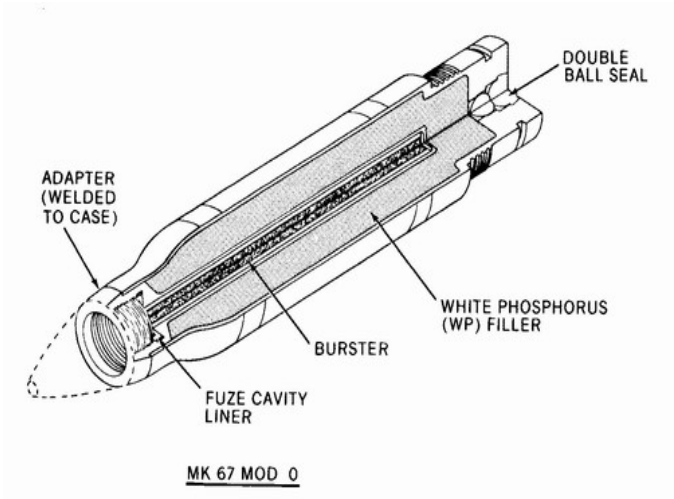

Nomenclature:	MK 67 MOD 0, Warhead, Rocket, 2.75 in, Smoke, (WP)
Ordnance Family:	Rockets
DODIC:	H890
Filler:	White Phosphorus* or Red Phosphorus**
Filler weight:	1.20 kg (2.65 lbs)
Item weight:	2.00 kg (4.41 lbs)
Diameter:	70.00 mm (2.75 in)
Length:	328.00 mm (12.91 in)
Maximum Range:	Not Provided
Fuze:	Mission dependent

Usage: The figure shows the appearance and dimensions of the Mk 67 Mod 0 and Mod 1 warheads. The Mod 0 is a white phosphorus (WP) smoke warhead used primarily for target marking, or incendiary purposes. The Mod 1 is a red phosphorus (RP) smoke warhead used for signaling or target marking. The weight of the Mod 0 warhead is 2.0 kilograms (4.5 pounds), and the weight of the Mod 1 is 4.0 kilograms (8.9 pounds).

Description: The Mod 0 warhead is painted light green. It has a red band around the forward end and a yellow band around the aft end. The designation, letters WP, and other information are stenciled in red. The Mod 1 warhead is painted light green with only a yellow band around the forward end. The Mod 1 nomenclature, letters RP, and other information are marked in white. Not shown in the figure, are warhead plugs and cover caps used during shipping and storage.

Reference: ORDATA Online, MIDAS**.**

***White phosphorus (WP) -** is a white to light yellow, wax like, and luminous substance (phosphorescent in the dark). On ignition it produces a yellow-white flame and dense white smoke. WP is poisonous when taken internally. Its smoke or fumes are not. When dispersed by ammunition, as small particles, it ignites spontaneously on exposure to air and continues to burn on contact with solid materials, even when embedded in human flesh. WP smoke is unpleasant to breathe but harmless; the particles, however, will poison food and water. It is used in bursting-type projectiles, artillery and mortar shell, grenades, rockets, and bombs. It is used as an igniter in incendiary ammunition that contains flammable fuels. WP, when used in projectiles and burst on terrain covered with soft deep snow, is smothered and produces approximately 75 percent less smoke.

**** Red phosphorus** - After World War II, RP smoke was developed as an attempt to avoid the toxicity associated with the manufacturing of white phosphorus. RP is 95% phosphorus in a 5% butyl rubber base and provides an adequate tank screen on the battlefield. When RP is oxidized, it forms a mixture of phosphorus acids. When these acids are exposed to water vapor, they in turn form poly-phosphoric acids, which may be responsible for the toxic injuries to the upper airways. Most of these injuries are mild irritations. No human deaths have been reported from exposure to either white phosphorous or RP smokes.

Ordnance Technical Data Sheet

U.S. Bomb Unit, Anti-Tank (AT), MK 118 MODS 0 & 1

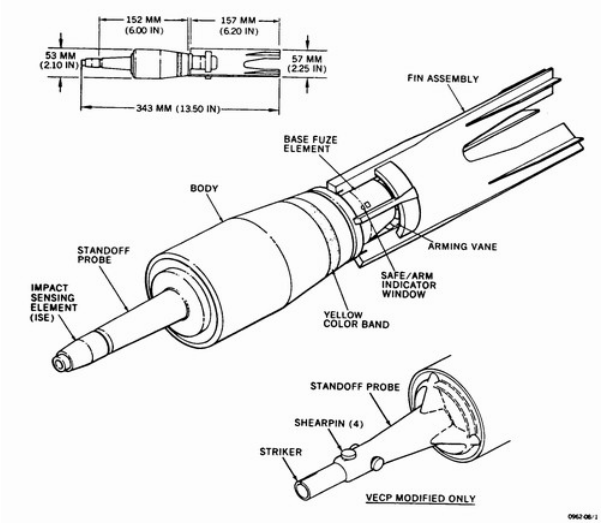

Nomenclature:	MK 118 MODS 0 & 1 AT, Sub-munitions
Ordnance Family:	Sub-munitions
DODIC:	Not Provided
Filler:	Octol*
Filler weight:	170.00 g (5.99 oz)
Item weight:	590.00 g (1.3 lbs)
Diameter:	53.00 mm (2.17 in)
Length:	165.00 mm (6.5 in)
Maximum Range:	Not Provided
Fuze:	Mk 1 fuze system

Usage: These are aerial dispensed, antitank (AT) shaped charge, target discriminating, in-stabilized bombs that use the Mk 1 fuzing system. The fuzing system provides for impact firing after contact with either a soft or hard target. An inert loaded bomb, containing a live fuze but no main explosive charge, is used for fuze reliability testing and establishing delivery tactics.

Description: The impact sensing element (Mods 0 and 1 bomb) and base fuze vanes are unpainted. The standoff probe, bomb body, and base fuze element cover are anodized gold. The fins are white plastic. A 15-millimeter (0.60-inch) yellow band is stenciled around the base of the bomb body. A metal foil decal, with the words SAFE and ARM in silver letters on a green and red background is affixed to the base fuze element cover just above the safe/arm indicator window. On some bombs, the decal is replaced with the words ARMED WHEN RED stenciled in black in the same location. The assembly drawing number and loading data are stenciled in black on the base fuze element cover and the forward portion of the bomb body. The main charge is 170 grams of Octol. The

booster is 5 grams of tetryl. The impact sensing element is less than 1 gram of lead azide. The base fuze element is less than 1 gram of lead azide. The Mk95/0 Detonator is less than 1 gram of lead azide. The Lead is less than 1 gram of Tetryl.

Reference: ORDATA Online, MIDAS.

***Octol -** Better known as 70/30 or 75/25 Octol. A mixture of HMX (70 or 75 percent), and TNT (30 or 25 percent). It is a solid, buff colored, castable explosive used in HE shells and as the filler for bombs.

Ordnance Technical Data Sheet

U.S. Grenade, Practice, MK 1A1

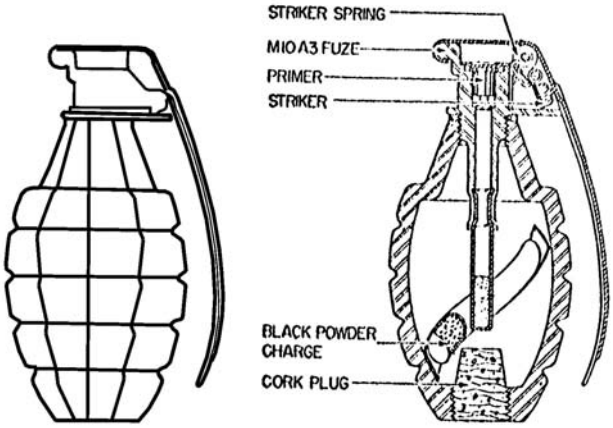

Nomenclature:	MK 1A1, Grenade, Practice
Ordnance Family:	Grenade
DODIC:	G965
Filler:	None or small Black Powder* witness charge
Filler weight:	Not Provided
Item Weight:	Not Provided
Diameter:	57.15 mm (2.25 in)
Length:	285.50 mm (11.25 in)
Maximum Range:	Not Provided
Fuze:	Percussion, M206

Usage: This grenade consists of a fragmentation body with a filing hole in the base, an Igniting Fuze M206, a small charge of black powder, and a cork plug in the filling hole. Extra fuzes, charges, and plugs are supplied separately, so that the grenade body can be reused.

Description: Pineapple shaped practice grenade, body is painted blue.

Reference: ORDATA Online.

***Black Powder:** Characteristics. Black powder, the oldest explosive known, is an intimate uniform mechanical mixture of finely pulverized potassium nitrate (or sodium nitrate), charcoal, and sulfur. Until the development of nitrocellulose propellants, black powder was the only propellant and explosive available. Potassium nitrate is used in most military black powders. It ignites spontaneously at about 300 degrees Celsius or 540 degrees Fahrenheit, and develops a fairly high temperature of combustion (2,300 degrees to 3,800 degrees Celsius or 4,172 degrees to 6,872 degrees Fahrenheit), which causes erosion in the bore of weapons. Black powder is usually in the form of small, black grains that are polished by glazing with graphite. It is hygroscopic and subject to rapid deterioration when exposed to moisture. If kept dry, it retains its

explosive properties indefinitely. It is one of the most dangerous explosives to handle because of the ease with which it is ignited by heat, friction, or spark.

Ordnance Technical Data Sheet

U.S. Grenade, MK 2, Hand, Fragmentation (FRAG)

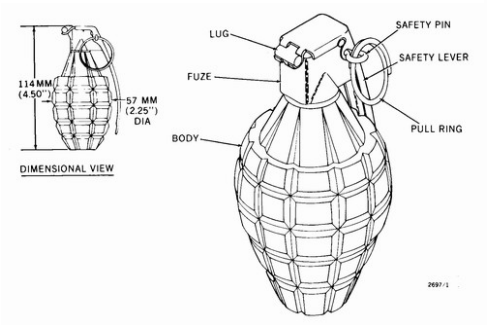

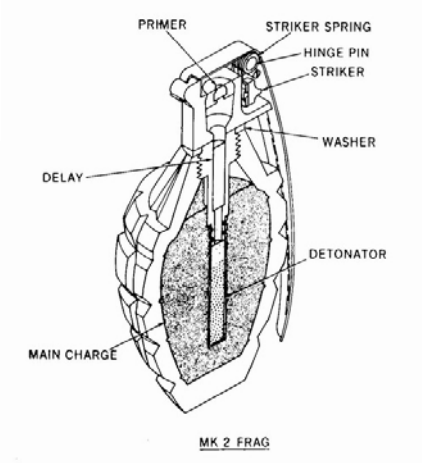

Nomenclature:	MK 2, Grenade, Hand, FRAG
Ordnance Family:	Grenade
DODIC:	Not Provided
Filler:	Flaked TNT*
Filler weight:	56.70 g (2 oz)
Item weight:	589.68 g (1.3 lbs)
Diameter:	57.00 mm (2.244in)
Length:	114.00 mm (4.88in)
Maximum Range:	10.00 m (10.44 yds)
Fragmentation Distance:	152.20 m (500 feet)
Fuze:	M204 A2 or A2 Fuze

Usage: The Mk 2 is a FRAG, anti-personnel, delay-detonating hand grenade which is commonly referred to as "pineapple" because of its shape and external serration.

Description: The Mk II grenade is painted olive drab, with a yellow band around the top of the fuze well. Slang name is “Pineapple” because of its shape and external serrations.

Reference: ORDATA Online, Army Field Manual FM 3-23.30

***TNT** also known as 2,4,6 Trinitrotoluene. It has a color of yellow to yellowish brown, depending on purity. A main-charge explosive used as a filler for high-explosive shells, bombs, depth charges, large coastal mines, rockets, and as a demolition charge. Maybe employed as a booster in pressed granular form. When flaked, may be used in small-caliber shells and projectiles, and in fragmentation hand grenades.

Ordnance Technical Data Sheet

Cartridge-actuated device (CAD)
Powder-actuated device (PAD)

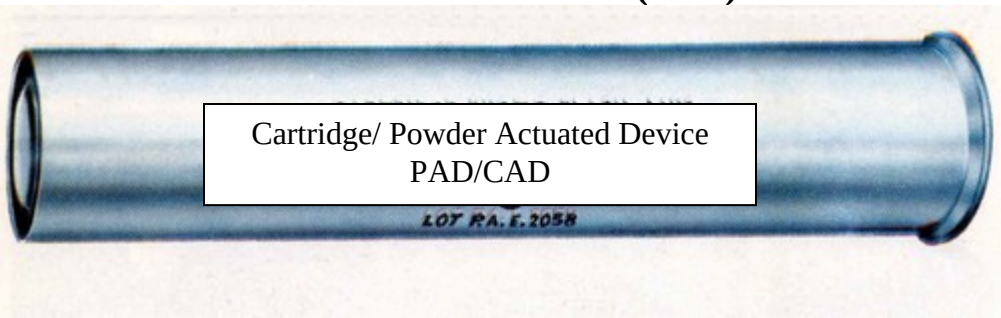

Nomenclature:	CAD/PAD
Ordnance Family:	Powder Actuated Device(s)
DODIC:	Not Provided
Filler:	Black Powder or Smokeless Powder
Filler weight:	Various usages dependent
Item weight:	Various usages dependent
Diameter:	Various
Length:	Various
Maximum Range:	Not Provided
Fuze:	Not Provided

Usage: A self-contained device employing smokeless powder or black powder as the primary source of working gas to drive a piston to do mechanical work. Examples include air-bag-inflation devices, bomb-ejection cartridges, cable cutters, fire-extinguishing systems, parachute-release mechanisms, flight-recorder-ejection systems, and aircraft-seat-ejection units.

Description: Outward appearance is/are usages dependent..

Reference: The National Academies Press, ORDATA Online.

* **Black Powder:** Characteristics. Black powder, the oldest explosive known, is an intimate uniform mechanical mixture of finely pulverized potassium nitrate (or sodium nitrate), charcoal, and sulfur. Until the development of nitrocellulose propellants, black powder was the only propellant and explosive available. Potassium nitrate is used in most military black powders. It ignites spontaneously at about 300 degrees Celsius or 540 degrees Fahrenheit, and develops a fairly high temperature of combustion (2,300 degrees to 3,800 degrees Celsius or 4,172 degrees to 6,872 degrees Fahrenheit), which causes erosion in the bore of weapons. Black powder is usually in the form of small, black grains that are polished by glazing with graphite. It is hygroscopic and subject to rapid deterioration when exposed to moisture. If kept dry, it retains its explosive properties indefinitely. It is one of the most dangerous explosives to handle because of the ease with which it is ignited by heat, friction, or spark.

**** Smokeless powder** is essentially gelatinized nitrocellulose and is manufactured in the form of flakes, strips, pellets, or perforated cylindrical grains. Smokeless powder is made in different shapes to obtain certain types of burning. The cylindrical grains are made in various diameters and lengths, Grains vary in diameter from 0.032 inch for caliber 30 cartridges to 0.947 inch for
16-inch propelling charges, and varies in corresponding lengths from 0_085 inch to 2.170 inches. For small-size grains either no perforation or a single perforation is required. However, for larger grains, seven equally spaced perforations are present in order to have large burning surface area. The critical dimension is the web size, that is, the average thickness of the powder between the perforations. In color, the grains vary from light amber to a deep brown or black. Nitrocellulose smokeless propellants are used as the propellant for small-arms and larger-caliber ammunition. The perforated form of grain is the one most commonly lured in United States military powders. Single perforated grains are used for small -arms, minor-caliber weapons, and certain howitzers. Powders with seven perforations are used for larger-caliber weapons.

Ordnance Technical Data Sheet

Nomenclature:
Ordnance Family:
DODIC:
Filler:
Filler weight:
Item weight:
Diameter:
Length:
Maximum Range:
Fuze:

Usage: **squib** is a small explosive device used in a wide range of industries, from special effects to military applications. They resemble tiny sticks of dynamite in appearance and in construction, although with considerably less explosive power. Squibs can be used to generate mechanical force, as well as to provide visual pyrotechnic effects both in movies and in live theatrics. Being an explosive device, a squib releases a considerable amount of energy, and can therefore be used for shattering or propelling many different materials.

Description: A squib generally consists of a small tube filled with an explosive substance, and a detonator running through the length of its core, similar to a stick of dynamite. Also similar to dynamite, the detonator can be a slow-burning fuse, or as is more common today, a wire connected to a remote electronic trigger. Squibs range in size, anywhere from 2 to 15 millimeters in diameter.

Squibs are sometimes confused with electric matches, as well as with detonators. While those are used specifically to trigger larger explosives, squibs are generally used as the main explosive element

Reference: ORDATA Online.

Appendix E: Response to Comments and Concurrences

This page intentionally is blank.

City of Seal Beach

CITY HALL 211 EIGHTH STREET
SEAL BEACH, CALIFORNIA 90740
(562) 431-2527 • www.ci.seal-beach.ca.us

September 24, 2008

Naval Weapons Station Seal Beach
Attn: Pei-Fen Tamashiro
Installation Restoration Coordinator
800 Seal Beach Boulevard
Seal Beach, CA 90740

Dear Ms. Tamashiro:

SUBJECT: **CITY OF SEAL BEACH COMMENTS RE: DRAFT MUNITIONS RESPONSE PROGRAM PRELIMINARY SITE INSPECTION – NAVAL WEAPONS STATION SEAL BEACH**

The Seal Beach Environmental Quality Control Board reviewed and considered the documentation regarding the "*Draft Munitions Response Program Preliminary Site Inspection – Naval Weapons Station Seal Beach*" on September 24, 2008.

The Board carefully reviewed appropriate portions of the document and determined to express its full support for the proposed "*Draft Munitions Response Program Preliminary Site Inspection – Naval Weapons Station Seal Beach*". The City looks forward to a continuing cooperative relationship with the Navy in its efforts to address munitions and explosives of concern (MEC) (including unexploded ordnance and discarded military munitions) and munitions constituents (MC) at other than non-operational military ranges and other sites within the Naval Weapons Station.

The Environmental Quality Control Board reviewed the Staff Report and accompanying documents and authorized the Chairperson to sign this comment letter on September 24, 2008. If you have questions regarding this matter, please contact Mr. Lee Whittenberg, Director of Development Services. He can be reached at (562) 431-2527, extension 1313, or by e-mail at lwhittenberg@ci.seal-beach.ca.us. Mr. Whittenberg will be most happy to clarify any concerns or answer any questions that you may have.

Sincerely,

Mario Voce

Mario Voce
Chairperson, Environmental Quality Control Board
City of Seal Beach

cc: City Council
Planning Commission
Director of Development Services

Naval Weapons Station Seal Beach
Draft Preliminary Site Inspection, August 2008
Response to Stakeholder Comments

Document: Draft Munitions Response Program Preliminary Site Inspection, Naval Weapons Station Seal Beach, Seal Beach, California

Commenter	Comment Number	Page Number/ Section	Comment	Response
California Environmental Protection Agency (Cal/EPA), Department of Toxic Substances Control (DTSC)	Specific Comment 1	Section, Page 3-4	First paragraph states that groundwater generally flows northeast, but the direction may vary seasonally. Therefore, the CSM should have reflected a potentially complete pathway for all sites for shallow groundwater to biota. The Explosive Drop Test Tower's shallow groundwater is tidally influenced, so any contaminants in shallow groundwater would be in contact with the salt water marsh biota.	Agreed. The text in the report has been revised throughout Section 5 to state that since shallow groundwater flow varies seasonally and can be tidally influenced, there is a potentially complete pathway for MC in shallow groundwater to affect biota.
CAL/EPA, DTSC	Specific Comment 2	Section 5.4, Figure 5.4-5	Should include another receptor of consumers if the produce grown here is sold off-site for any purpose.	Comment noted. The area occupied by the former Building 94 Settling Basin has been excluded from agricultural activities. Soil in this area will be investigated to determine whether the area is suitable for farming. Therefore, there is no proposed change to the figure in Section 5.4. The text in Section 5.4 will be revised to state that the basin has not been used for agricultural purposes since Fall 2008.

Commenter	Comment Number	Page Number/ Section	Comment	Response
California Regional Water Quality Control Board, Santa Ana Region			We have completed our review of the Draft Munitions Response Program Preliminary Site Inspection Report dated August 2008. The document describes the following six sites: Primer/Salvage Yard, Port of Long Beach Mitigation Pond, Buildings 101-102 Evaporation Ponds, Building 94 Settling Basin, Explosives Drop Test Tower, and Westminster Port of Long Beach Fill Area. We do not have any comments on the above referenced document.	Comment noted.